User Manual

SZGH-CNC990MDc
Milling Control System
-PROGRAMMING-
V3.0

-BOOK1-

Shenzhen Guanhong Automation CO.,LTD
Website: www.szghauto.com
Add:Room 503 Anxin Building, No 536 Shenhui Road, Liuyue community, Henggang Street ,Longgang District, Shenzhen City,Guangdong Province, ChinaProvince, China
Post code: 518115

Warnings and Notes as Used in this Publication

Warning

Warning notices are used in this publication to emphasize that hazardous voltages, currents, temperatures, or other conditions that could cause personal injury exist in this equipment or may be associated with its use.
In situations where inattention could cause either personal injury or damage to equipment, a Warning notice is used.

Caution

Caution notices are used where equipment might be damaged if care is not taken.

Note

Notes merely call attention to information that is especially significant to understanding and operating the equipment.

This document is based on information available at the time of its publication. While efforts have been made to be accurate, the information contained herein does not purport to cover all details or variations in hardware or software, nor to provide for every possible contingency in connection with installation, operation, or maintenance. Features may be described herein which are not present in all hardware and software systems. GE Fanuc Automation assumes no obligation of notice to holders of this document with respect to changes subsequently made.

Shenzhen Guanhong Automation makes no representation or warranty, expressed, implied, or statutory with respect to, and assumes no responsibility for the accuracy, completeness, sufficiency, or usefulness of the information contained herein. No warranties of merchantability or fitness for purpose shall apply.

©Copyright 2016 Shenzhen Guanhong Automation Co.,Ltd.
All Rights Reserved.

SAFETY PRECAUTIONS

This section describes the safety precautions related to the use of CNC units. It is essential that these precautions be observed by users to ensure the safe operation of machines equipped with a CNC unit (all descriptions in this section assume this configuration). Note that some precautions are related only to specific functions, and thus may not be applicable to certain CNC units.

Users must also observe the safety precautions related to the machine, as described in the relevant manual supplied by the machine tool builder. Before attempting to operate the machine or create a program to control the operation of the machine, the operator must become fully familiar with the contents of this manual and relevant manual supplied by the machine tool builder.

1 Definition of Warning , Caution, and Note

This manual includes safety precautions for protecting the user and preventing damage to the machine. Precautions are classified into Warning and Caution according to their bearing on safety. Also, supplementary information is described as a Note. Read the Warning, Caution, and Note thoroughly before attempting to use the machine.

WARNING

Applied when there is a danger of the user being injured or when there is a danger of both the user being injured and the equipment being damaged if the approved procedure is not observed.

CAUTION

Applied when there is a danger of the equipment being damaged, if the approved procedure is not observed.

NOTE

The Note is used to indicate supplementary information other than Warning and Caution.

Read this manual carefully, and store it in a safe place！

2 GENERAL WARNINGS AND CAUTIONS

Warning

1. Never attempt to machine a workpiece without first checking the operation of the machine.
Before starting a production run, ensure that the machine is operating correctly by performing a trial run using, for example, the single block, feedrate override, or machine lock function or by operating the machine with neither a tool nor workpiece mounted. Failure to confirm the correct operation of the machine may result in the machine behaving unexpectedly, possibly causing damage to the workpiece and/or machine itself, or injury to the user.
2. Before operating the machine, thoroughly check the entered data. Operating the machine with incorrectly specified data may result in the machine behaving unexpectedly, possibly causing damage to the workpiece and/or machine itself, or injury to the user.
3. Ensure that the specified feedrate is appropriate for the intended operation. Generally, for each machine, there is a maximum allowable feedrate. The appropriate feedrate varies with the intended operation. Refer to the manual provided with the machine to determine the maximum allowable feedrate. If a machine is run at other than the correct speed, it may behave unexpectedly, possibly causing damage to the workpiece and/or machine itself, or injury to the user.
4. When using a tool compensation function, thoroughly check the direction and amount of Compensation. Operating the machine with incorrectly specified data may result in the machine behaving unexpectedly, possibly causing damage to the workpiece and/or machine itself, or injury to the user.
5. The parameters for the CNC and PMC are factory-set. Usually, there is not need to change them. When, however, there is not alternative other than to change a parameter, ensure that you fully understand the function of the parameter before making any change. Failure to set a parameter correctly may result in the machine behaving unexpectedly, possibly causing damage to the workpiece and/or machine itself, or injury to the user.
6. Immediately after switching on the power, do not touch any of the keys on the MDI panel until the position display or alarm screen appears on the CNC unit. Some of the keys on the MDI panel are dedicated to maintenance or other special operations. Pressing any of these keys may place the CNC unit in other than its normal state. Starting the machine in this state may cause it to behave unexpectedly.
7. The operator's manual and programming manual supplied with a CNC unit provide an overall description of the machine's functions, including any optional functions. Note that the optional functions will vary from one machine model to another. Therefore, some functions described in the manuals may not actually be available for a particular model. Check the specification of the machine if in doubt.
8. Some functions may have been implemented at the request of the machine–tool builder. When using such functions, refer to the manual supplied by the machine–tool builder for details of their use and any related cautions.

NOTE: Programs,parameters, and macro variables are stored in nonvolatile memory in the CNC unit. Usually, they are retained even if the power is turned off. Such data may be deleted inadvertently, however, or it may prove necessary to delete all data from nonvolatile memory as part of error recovery.To guard against the occurrence of the above, and assure quick restoration of deleted data, backup all vital data, and keep the backup copy in a safe place.

3 WARNINGS AND CAUTIONS RELATED TO PROGRAMMING

This section covers the major safety precautions related to programming. Before attempting to perform programming, read the supplied operator's manual and programming manual carefully such that you are fully familiar with their contents.

Warning

1.Coordinate system setting

If a coordinate system is established incorrectly, the machine may behave unexpectedly as a result of the program issuing an otherwise valid move command.

Such an unexpected operation may damage the tool, the machine itself, the workpiece, or cause injury to the user.

2. Positioning by nonlinear interpolation

When performing positioning by nonlinear interpolation (positioning by nonlinear movement between the start and end points), the tool path must be carefully confirmed before performing programming. Positioning involves rapid traverse. If the tool collides with the workpiece, it may damage the tool, the machine itself, the workpiece, or cause injury to the user.

3. Function involving a rotation axis

When programming polar coordinate interpolation or normal–direction (perpendicular) control, pay careful attention to the speed of the rotation axis. Incorrect programming may result in the rotation axis speed becoming excessively high, such that centrifugal force causes the chuck to lose its grip on the workpiece if the latter is not mounted securely. Such mishap is likely to damage the tool, the machine itself, the workpiece, or cause injury to the user.

4. Inch/metric conversion

Switching between inch and metric inputs does not convert the measurement units of data such as the workpiece origin offset, parameter, and current position. Before starting the machine, therefore, determine which measurement units are being used. Attempting to perform an operation with invalid data specified may damage the tool, the machine itself, the workpiece, or cause injury to the user.

5. Constant surface speed control

When an axis subject to constant surface speed control approaches the origin of the workpiece coordinate system, the spindle speed may become excessively high. Therefore, it is necessary to specify a maximum allowable speed. Specifying the maximum allowable speed incorrectly may damage the tool, the machine itself, the workpiece, or cause injury to the user.

6. Stroke check

After switching on the power, perform a manual reference position return as required. Stroke check is not possible before manual reference position return is performed. Note that when stroke check is disabled, an alarm is not issued even if a stroke limit is exceeded, possibly damaging the tool, the machine itself, the workpiece, or causing injury to the user.

7. Absolute/incremental mode

If a program created with absolute values is run in incremental mode, or vice versa, the machine may behave unexpectedly.

8. Plane selection

If an incorrect plane is specified for circular interpolation, helical interpolation, or a canned cycle, the machine may behave unexpectedly. Refer to the descriptions of the respective functions for details.

9. Compensation function

If a command based on the machine coordinate system or a reference position return command is issued in compensation function mode, compensation is temporarily canceled, resulting in the unexpected behavior of the machine. Before issuing any of the above commands, therefore, always cancel compensation function mode.

4 WARNINGS AND CAUTIONS RELATED TO HANDLING

This section presents safety precautions related to the handling of machine tools. Before attempting to operate your machine, read the supplied operator's manual and programming manual carefully, such that you are fully familiar with their contents.

Warning

1. Manual operation

When operating the machine manually, determine the current position of the tool and workpiece, and ensure that the movement axis, direction, and feedrate have been specified correctly. Incorrect operation of the machine may damage the tool, the machine itself, the workpiece, or cause injury to the operator.

2. Manual reference position return

After switching on the power, perform manual reference position return as required. If the machine is operated without first performing manual reference position return, it may behave unexpectedly. Stroke check is not possible before manual reference position return is performed.

An unexpected operation of the machine may damage the tool, the machine itself, the workpiece,or cause injury to the user.

3. Manual handle feed

In manual handle feed, rotating the handle with a large scale factor, such as 100, applied causes the tool and table to move rapidly. Careless handling may damage the tool and/or machine, or cause injury to the user.

4. Disabled override

If override is disabled (according to the specification in a macro variable) during threading or other tapping, the speed cannot be predicted, possibly damaging the tool, the machine itself, the workpiece, or causing injury to the operator.

5. Origin/preset operation

Basically, never attempt an origin/preset operation when the machine is operating under the control of a program. Otherwise, the machine may behave unexpectedly, possibly damaging the tool, the machine itself, the tool, or causing injury to the user.

6. Workpiece coordinate system shift

Manual intervention, machine lock, or mirror imaging may shift the workpiece coordinate system. Before attempting to operate the machine under the control of a program, confirm the coordinate system carefully. If the machine is operated under the control of a program without making allowances for any shift in the workpiece coordinate system, the machine may behave unexpectedly, possibly damaging the tool, the machine itself, the workpiece, or causing injury to the operator.

7. Software operator's panel and menu switches

Using the software operator' s panel and menu switches, in combination with the MDI panel, it is possible to specify operations not supported by the machine operator' s panel, such as mode change, override value change, and jog feed commands.

Note, however, that if the MDI panel keys are operated inadvertently, the machine may behave unexpectedly, possibly damaging the tool, the machine itself, the workpiece, or causing injury to the user.

8. Manual intervention

If manual intervention is performed during programmed operation of the machine, the tool path may vary when the machine is restarted. Before restarting the machine after manual intervention, therefore, confirm the settings of the manual absolute switches, parameters, and absolute/incremental command mode.

9. Feed hold, override, and single block

The feed hold, feedrate override, and single block functions can be disabled using custom macro system variable #3004. Be careful when operating the machine in this case.

10. Dry run

Usually, a dry run is used to confirm the operation of the machine. During a dry run, the machine operates at dry run speed, which differs from the corresponding programmed feedrate. Note that the dry run speed may sometimes be higher than the programmed feed rate.

11. Cutter and tool nose radius compensation in MDI mode

Pay careful attention to a tool path specified by a command in MDI mode, because tool nose radius compensation is not applied. When a command is entered from the MDI to interrupt in automatic operation in tool nose radius compensation mode, pay particular attention to the tool path when automatic operation is subsequently resumed. Refer to the descriptions of the corresponding functions for details.

12. Program editing

If the machine is stopped, after which the machining program is edited (modification, insertion, or deletion), the machine may behave unexpectedly if machining is resumed under the control of that program. Basically, do not modify, insert, or delete commands from a machining program while it is in use.

5 WARNINGS RELATED TO DAILY MAINTENANCE

WARNING

1. Memory backup battery replacement

When replacing the memory backup batteries, keep the power to the machine (CNC) turned on, and apply an emergency stop to the machine. Because this work is performed with the power on and the cabinet open, only those personnel who have received approved safety and maintenance training may perform this work.
When replacing the batteries, be careful not to touch the high－voltage circuits (marked and fitted with an insulating cover).Touching the uncovered high－voltage circuits presents an extremely dangerous electric shock hazard.

NOTE:The CNC uses batteries to preserve the contents of its memory, because it must retain data such as programs, offsets, and parameters even while external power is not applied. If the battery voltage drops, a low battery voltage alarm is displayed on the machine operator's panel or screen. When a low battery voltage alarm is displayed, replace the batteries within a week. Otherwise, the contents of the CNC's memory will be lost. Refer to the maintenance section of the operator's manual for details of the battery replacement procedure.

2. Absolute pulse coder battery replacement

When replacing the memory backup batteries, keep the power to the machine (CNC) turned on, and apply an emergency stop to the machine. Because this work is performed with the power
on and the cabinet open, only those personnel who have received approved safety and maintenance training may perform this work. When replacing the batteries, be careful not to touch the high－voltage circuits (marked and fitted with an insulating cover). Touching the uncovered high－voltage circuits presents an extremely dangerous

electric shock hazard.

NOTE:The absolute pulse coder uses batteries to preserve its absolute position. If the battery voltage drops, a low battery voltage alarm is displayed on the machine operator's panel or screen. When a low battery voltage alarm is displayed, replace the batteries within a week. Otherwise, the absolute position data held by the pulse coder will be lost.

3. Fuse replacement

For some units, the chapter covering daily maintenance in the operator' s manual or programming manual describes the fuse replacement procedure.

Before replacing a blown fuse, however, it is necessary to locate and remove the cause of the blown fuse. For this reason, only those personnel who have received approved safety and maintenance training may perform this work.

When replacing a fuse with the cabinet open, be careful not to touch the high－voltage circuits (marked and fitted with an insulating cover).

Touching an uncovered high－voltage circuit presents an extremely dangerous electric shock hazard.

Special Attention:

1. ***All the functions of A axis are effective when configure with fourth axis system.***
2. ***When use this system for the first time, please read carefully all the details of each chapter so as to make it work more efficientive and safer.***
3. ***The "Run" button on the panel of system can be used when debugging (P9 in Other parameter to set "Valid" or "Invalid"), must plus an external "Run" button when fitting system, otherwise may cause accident because of the life of button!!!So the system prohibits using the "Run" button of panel for long times, otherwise the consequences has nothing to do with my company.***
4. ***Don't plug & insert connector when system is on power.***
5. ***P -- Parameter , P1 stands for the No.1 parameter .***

CONTENTS

SAFETY PRECAUTIONS....I
1 Definition of Warning , Caution, and Note.... I
2 GENERAL WARNINGS AND CAUTIONS.... II
3 WARNINGS AND CAUTIONS RELATED TO PROGRAMMING....III
4 WARNINGS AND CAUTIONS RELATED TO HANDLING....IV
5 WARNINGS RELATED TO DAILY MAINTENANCE....V
CONTENTS.... VII
Chapter 1 Preface....1
1.1 Characteristics....2
1.2 Technical Specifications.... 2
1.3 System operation condition.... 3
1.4 G Code List....4
Chapter 2 Programming....6
2.1 Basic Concepts of Programming.... 6
2.1.1 Tool Movement Along Workpiece Parts Figure Interpolation.... 7
2.1.2 Feed Function.... 8
2.1.3 Part Drawing And Tool Movement.... 8
2.1.4 Coordinate System....9
2.1.5 Indicated Command Dimensions for Moving the Tool....11
2.1.6 Cutting Speed-Spindle Speed Function....12
2.1.7 Tool Function....13
2.1.8 Command For Machine Operations.... 13
2.2 Configuration of Program....14
2.3 Main Program & Subprogram.... 17
2.4 Program Run.... 17
2.5 Tool Figure And Tool Motion By Program.... 18
2.6 Tool Movement Range-Stroke....19
Chapter 3 G INSTRCUTIONS....20
3.1 INTRODUCTION.... 20
3.2 G Code List....20
3.3 Positioning (Rapid Traverse) (G00).... 24
3.4 Linear Interpolation (G01)....25
3.5 Circular Interpolation (G02/G03)....27
3.6 Helical Interpolation (G02/G03).... 30
3.7 3D Space Arc Interpolation G06.... 31
3.8 Dwell (G04).... 32
3.9 Skip Function(G31,G311).... 33
3.10 Reference Position.... 34
3.11 Return to Starting Point (G26,G261~G264)....35
3.12 Save Current Position (G25)....35

3.13 Return to Specified Position (G61,G611~G614)..... 35
3.14 Coordinate System..... 36
3.14.1 Machine Coordiante System (G53)..... 36
3.14.2 Workpiece Coordiante system(G54/G55/G56/G57/G58/G59)..... 37
3.14.3 Local Coordinate System (G52)..... 39
3.15 Plane Selection(G17/G18/G19)..... 41
3.16 Absolute and Incremental Programming (G90/G91)..... 41
3.17 Pole coordinate instruction(G15/G16)..... 42
3.18 Inch/Metric Conversion (G20/G21)..... 44
3.19 Feed Mode..... 44
3.20 Processing Mode (G60/G64)..... 45
3.21 Scaling (G36/G37)..... 46
3.22 Programmable mirror image (G11/G12)..... 47
3.23 Rotate Coordinate Instruction (G68/G69)..... 48
3.24 Tool Length Offset (G43/G44/G49)..... 50
3.25 Tool Offset(45/G46/G47/G48)..... 53
3.26 Tool Radius Compensation C (G40/G41/G42)..... 56
3.27 Details of Tool Compensation C..... 60
3.27.1 Inside and outside..... 60
3.27.2 Tool movement when start-up..... 60
3.28 Canned Cycle (G73-G89)..... 66
3.27.1 High-speed Peck Drilling Cycle(G73)..... 69
3.28.2 Left-handed Peck Rigid Tapping Cycle (G74)..... 71
3.28.3 Fine Boring Cycle (G76)..... 73
3.28.4 Canned Cycle Cancel (G80)..... 74
3.28.5 Drilling cycle, Spot Drilling (G81)..... 75
3.28.6 Drilling Cycle Counter Boring Cycle (G82)..... 76
3.28.7 Peck Drilling Cycle (G83)..... 77
3.28.8 Right-handed Peck Rigid Tapping Cycle (G84)..... 78
3.28.9 Boring Cycle (G85)..... 80
3.28.10 Boring Cycle (G86)..... 81
3.28.11 Back Boring Cycle (G87)..... 82
3.28.12 Boring Cycle (G89)..... 84
3.28.13 Example of Canned Cycle..... 85
3.29 Block Cycle (G22,G800)..... 87
3.30 Macro program instruction(G65/G66/G67)..... 88
3.30.1 Non-Mode Macro Command G65..... 88
3.30.2 Mode Macro Command G66/G67..... 88
3.30.3 Macro Program Instruction..... 89
3.30.3.1 Input Instruction: WAT..... 89
3.30.3.2 Output Instruction: OUT..... 89
3.30.3.3 Assignment Instruction: =..... 89
3.30.3.4 Unconditional Jump: GOTO n..... 89
3.30.3.5 Conditional Jump..... 89

3.30.3.6 Loop Command....90
3.30.4 Operators' meaning....91
3.30.5 Arithmetic & Logic Operation....91
3.30.6 Local Variable....91
3.30.7 Global Variable....92
3.30.8 System Variable....92
3.30.9 System Parameter Variable....92
3.30.10 I/O variable....92
3.30.11 Message Hint Dialog Box....92
3.30.12 Build Processing Program Automatically....93
3.31 User-defined Macro Instruction (G110-G170)....94
3.31.1 Bolt Hole Circle Drilling Cycle....94
3.31.2 Inner Circle Groove Roughing Cycle (G110/G111)....95
3.31.3 Inner Circle Groove Fine Cycle (G112/G113)....97
3.31.4 Outer Circle Fine Milling Cycle (G114/G115)....99
3.31.5 Outer Circle Rough Milling Cycle (G116/G117)....100
3.31.6 Outer Rectangle Rough Milling Cycle (G132/G133)....102
3.31.7 Inner Rectangle Groove Roughing Cycle (G134/G135)....105
3.31.8 Inner Rectangle Groove Fine Milling Cycle (G136/G137)....107
3.31.9 Outer Rectangle Fine Milling Cycle (G138/G139)....108
3.31.10 Tool Change for Linear Tool Magazine (G120)....110
3.31.11 Tool change for Hat Tool Magazine (G121)....111
Chapter 4 M INSTRCUTIONS....113
4.1 M Function (Auxiliary Function)....113
4.1.1 Program Stop(M00)....113
4.1.2 Optional Stop (M01)....113
4.1.3 End of Program (M02,M30)....113
4.1.4 Cycle of Program (M20)....113
4.1.5 Account of Workpiece(M87)....113
4.1.6 Uncondtional Jump (M97)....113
4.2 Subprogram Configuration....114
4.2.1 Calling of Subprogram (M98)....114
4.2.2 End of Subprogram (M99)....114
4.3 Standard PLC M Command List....115
4.3.1 M Output Command List....115
4.3.1.1 Spindle Control (M03/M04/M05)....116
4.3.1.2 Spindle Gear Shifting(M41/M42/M43/M44)....117
4.3.1.3 Coolant(M08/M09)....118
4.3.1.4 Lubricate(M32/M33)....118
4.3.1.5 Chuck(M10/M11)....118
4.3.1.6 Huff(M59/M58)....119
4.3.1.7 Condition Output of Machine Tool(M65/M67/M69)....119
4.3.2 M Input Command List....119
4.4 Analog Speed of Spindle(S , SS)....120

4.5 Comprehensive examples for programming..... 120
4.6 Usage for automatic tool setting gauge..... 121
4.7 Usage for automatical dividing center.....122

Chapter 1 Preface

CNC machine tool is an electro-mechanical integrated product, composed of Numerical Control Systems of Machine Tools, machines, electric control components, hydraulic components, pneumatic components, lubricant, coolant and other subsystems (components), and CNC systems of machine tools are control cores of CNC machine tools. CNC systems of machine tools are made up of computerized numerical control(CNC), servo (stepper) motor drive devices, servo (or stepper) motor and etc.

SZGH-CNC990MDc series CNC controller is the newest universal & high-performance type CNC system for milling machine, drilling machine, boring machine ,engraving machine & CNC Router, which is developed by our company. The control circuit is using the latest industrial high-speed ARM 11 processor, large-scale field and programmable FPGA technology, multilayer PCB, the machine adopts the high integrated chip and surface mount components, the structure is more compact and reasonable so that make sure the reliability and stability of the system.

SZGH-CNC990MDc sereis CNC controller can control four feeding axes, two analog spindles, 2ms interpolation in real-time control with high speed (5MHz Pulse Output Frequency) and 0.1um precision,which obvisously improve the efficiency, precision and surface quality of processing parts. Adopt 800x600 dot matrix TFT LCD adaptive brightness LCD displayer, LED backlight brightness uniformity and long service life, and overcomes the display brightness by environmental temperature changes the shortcoming. Full screen English menu display, operation is simple and convenient.

This manual introduce the programming and using method of milling system detailly.

Fig1.1 SZGH-CNC990MDc

Note: This picture of SZGH-CNC990MDc series CNC controller just for reference!

1.1 Characteristics

- 32 bits high performance,industrial grade ARM11+DSP+FPGA
- 128MB Memory , 100Mb user store room(Updated!)
- 800x600 8.4 inch high-resolution real color LCD display
- High anti-jamming switch power(220VAC -> 24VDC & 5VDC)
- Support USB-DNC & RS232-DNC & MPG
- Basic I/Os : 40*24
- 5MHz Pulse Output Frequency, Max speed is 300m/min(Updated!)
- Support ATC function , Macro function and PLC function(Updated!)
- Support Liear Scale & Position Feedback Function(Updated!)
- Support macro variable dialog box & Running program by input point (Updated!)
- PLC on-line monitor, edit, compiling and signals trace function(Updated!)
- Analog voltage output of 0~10V in two channels, support double spindles
- Easily study, use and debugging abundant helps, prompt messages
- Support Increment & Absolute Servo & Stepper

1.2 Technical Specifications

Max Number of control axes

• Number of control axes: 4 axes (X Y Z A)
• Number of linkage axes: 4 axes
• Number of PLC control axes: 4 axes

Feeding axes function

• Minimum command unit: 0.001mm
• Position command range: +/- 99999.999
• Max speed: 30 m/minFeeding speed:0.001-15m/min
• G00 rapid override: Total 8 levels: 0~150%,real-time adjusting
• Feeding override: Total 16 levels: 0~150%,real-time adjusting
• Spindle override: Total 16 levels: 5%~150%,real-time adjusting
• Interpolation mode: Interpolation of linear ,arc ,thread and rigid tapping
• Auto chamfering

Spindle function

• Analog voltage 0~10V output in two channels ,support two-spindle control
• Spindle encoder feedback in one channel,resolution of spindle encoder can be set
• Spindle speed: It is set by speed parameter,max spindle speed also coressponding to 10V
• Spindle override: Total 16 levels: 5%~150%,real-time adjusting
• Spindle constant surface speed control

Precision compensation

• Backlash compensation/Pitch error compensation in memory type
• Built-in Thread Compensation

PLC function

• Refresh cycle: 8ms
• PLC program can be altered on PC , download by USB interface
• I/Os : 40*24 I/Os

• Support On-line display,monitor & alter ladder

Man-machine interface

• 8.4" large screen real-color LCD , the resolution is 480 000
• Display in Chinese or English
• Display in 3D tool path
• Real-time clock
• Operation management
• Operate mode:Auto, Manual, MDI, mechanical zero return, MPG/single step。
• Operation authority of multiple-level management
• Alarm record

Edit program

• Program capacity: 128M
• Editing function: program/block/characters research ,rewriting and deleting
• Program format: ISO code,support Macro command programming, programming of relative coordinate ,absolute coordinate and hybrid coordinate
• Calling program: Support macro program ,subprogram

Safety function

• Emergency stop
• Hardware travel limit
• Software travel limit
• Data restoring and recovering
• User-defined alarm hint

1.3 System operation condition

1) Power supplying

AC 220V(+10%/-15%), Frequency 50Hz±2%. Power:≤ 200W.

Note: it must use isolation transform to supply power first input:380V

2) Climate condition

Item	Working Conditions	Storage&Delivery Conditions
Ambient Temperature	0℃~45℃	-40℃~+70℃
Ambient Humidity	≤95%(no freezing)	≤95%(40℃)
Atmosphere Pressure	86kPa~106kPa	86kPa~106kPa
Altitude	≤1000m	≤1000m

3) operation environment :

No excessive flour dust, no acid, no alkali gas and explosive gas, no strong electromagnetic interference.

1.4 G Code List

CODE	Description	CODE	Description
G00	Rapid Positioning	G17	XY plane selection
G01	Linear Interpolation	G18	ZX plane selection
G02	Circular Interpolation CW	G19	YZ plane selection
G03	Circular Interpolation CCW	G90	Absolute value programming
G31	Jumping function	G91	Incremental value programming
G311	Jumping function	G30	Return to zero point of coordinate
G04	Dwell	G301	X-axis Return to zero point of coordinate
G15	Polar coordinate command cancel	G302	Y-axis Return to zero point of coordinate
G16	Polar coordinate command	G303	Z-axis Return to zero point of coordinate
G20	Inch input	G304	A-axis Return to zero point of coordinate
G21	Millimeter input	G26	Return to starting point of program
G37	Scaling Cancel	G261	X-axis Return to starting point of program
G36	Scaling	G262	Y-axis Return to starting point of program
G12	Programmable mirror image Cancel	G263	Z-axis Return to starting point of program
G11	Programmable mirror image	G264	A-axis Return to starting point of program
G60	Exact stop & position	G265	B-axis Return to starting point of program
G64	Continous track processing	G25	Save curret coordinate value
G65	Macro command non-mode calling	G61	Return to position of G25
G66	Macro command mode calling	G611	X-axis return to position of G25
G67	Macro program mode calling calling	G612	Y-axis return to position of G25
G68	Constant surface speed control	G613	Z-axis return to position of G25
G69	Constant surface speed control cancel	G614	A-axis return to position of G25
G73	High Speed Peck Drilling Cycle	G615	B-axis return to position of G25
G80	Canned cycle for drilling cancel	G28	Return to home of machine
G81	Dot Drilling cycle	G281	X-axis return to home of machine

G82	Boring Stage hole cycle	G282	Y-axis return to home of machine
G83	Deep hole drilling cycle	G283	Z-axis return to home of machine
G85	Boring Cycle	G284	A-axis return to home of machine
G86	Boring Cycle	G285	B-axis return to home of machine
G89	Boring Cycle	G52	Local Coordinate System Setup
G74	Reverse Tapping Cycle	G53	Machine coordinate system
G84	Tapping Cycle	G54	Workpiece coordinate system 1
G94	Feed per minute	G55	Workpiece coordinate system 2
G95	Feed per revolution	G56	Workpiece coordinate system 3
G98	Return to initial level	G57	Workpiece coordinate system 4
G99	Return to R point level	G58	Workpiece coordinate system 5
G110	CCW round groove roughing	G22	Program Cycle
G111	CW round groove roughing	G800	Program Cycle Cancel
G112	Finishing in CCW full circle	G40	Tool nose radius compensation cancel
G113	Finishing in CW full circle	G41	Tool nose radius left compensation
G114	CCW outer circle finishing	G42	Canned Tapping Cycle
G115	CW outer circle finishing	G43	Radial Cutting Cycle
G116	CCW outer circle groove roughing	G44	Program Cycle
G117	CW outer circle groove roughing	G49	Program Cycle Cancel
G132	CCW rectangle outer roughing	G45	Polar coordinate command cancel
G133	CW rectangle outer roughing	G46	Polar coordinate command
G134	CCW rectangle groove roughing	G47	Absolute value programming
G135	CW retecangle groove roughing	G48	Incremental value programming
G136	CCW rectangle groove finishing	G120	Tool changing for linear tool magazine
G137	CW rectangle groove finishing	G121	Tool changing for umbrella tool magazine
G138	CCW rectangle outer finishing	G122	Tool changing for Arm tool magazine
G139	CW rectangle outer finishing	G06	3D Space Arc Interpolation

Chapter 2 Programming

CNC milling System is highly effective automatical equipment according to programmed program to process workpiece. Programming is using the CNC system control language according to the requirement and drawing of the workpiece to describe the processing trajectory and the assistant action. Ideal system not only could promise process qualified workpiece, but also make the functions of milling reasonable application and fully use, so it is very important to programming, this chapter will introduce many kinds of instructions and usage of CNC program, please read carefully.

2.1 Basic Concepts of Programming

Item	SZGH-CNC990MDc
No. of Basic Controllable Axes	3 (X, Y, Z)
Expansion of controlled axis(total)	Up to 4(X, Y, Z, A)

Table 2-1-1

Program Segment:a complete command line consisted of instruction and data .

Program: is a congregation of program segment by machining logic structure in order to complete the machining of workpiece.

Machine Coordinate System: The establishment of coordinate is based on machine's zero point.The milling machine coordinate axis and its direction should follow to "ISO841" standard.The method as follow: Through right hand rule we can make the program coordinate, The Z axis is parallel as spindle, The X axis is horizontal, The Y axis is determined by right hand rule. The A, B, C are rotated axis or assistant axis which parallel as X,Y,Z axis. Furthermore, The coordinate axis direction is the increasing workpiece dimension direction.

When without set work coordinate, take machine coordinate as work coordinate.

Machine Coordinate & direction sketch map

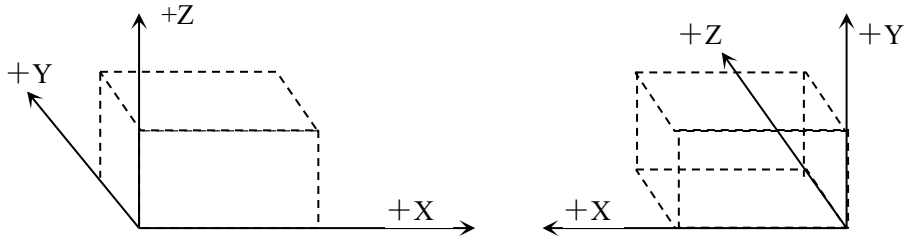

Vertical milling,drill machine Horizontal milling

Working Coordinate System: Work piece processing uses the coordinate system is called as the work piece coordinate system, it is set by CNC. The work piece coordinate system could change to move its zero point.

Set the workpiece coordinates:

1.Use G54 ~ G59: Use coordinate parameters to set 6 workpiece coordinate system.

2.G52: Set a value behind G52 to set the workpiece coordinate system in program.

With absolute value instruction ,it must use the above method to establish the work piece coordinate system.

Local coordinate system: Set local coordinate system of workpiece coordinate system in order to programme easily when programming in workpiece coordinate system.

Absolute Programming:coordinates data of programming mode based on established absolute coordinate system.Absolute coordinate value is corespoinding to homing point of coordinate system. It is settlements by “G90 X_Y_Z_A_”.

Relative Programming(increment programming)： It is distance and direction of operation end point ,compared with starting point.It is settlements by “G90”.

Mode Instruction： The instruction which can remain the function in the program.It works both in this program and program in the future.

In the same operation, there may be several mode instruction, such as M03(spindle clockwise),M04(spindle counter clockwise),M05(spindle stop).They are all mode used to control spindle.The mode of same kind are categorized into one mode group.At any time it must be one of them,and there is only one of them.The original chosen mode is called mode origin.In the above mode group,M05 is such a mode origin .

Suspending Mode(destroying mode): It is instruction which can turn mode instruction into mode origin or destroy the mode.Such as M20(program ending instruction),meaning the end of operation and returning to original status.

Non-Mode instruction： It is the instruction which has no function to store,and only works in the segment of program.

2.1.1 Tool Movement Along Workpiece Parts Figure Interpolation

The tool moves along straight lines and arcs constituting the workpiece pats figure(See Fig2.1.1)

The function of moving the tool along straight lines and arcs is called the interpolation.

a)Tool movement along a straight line

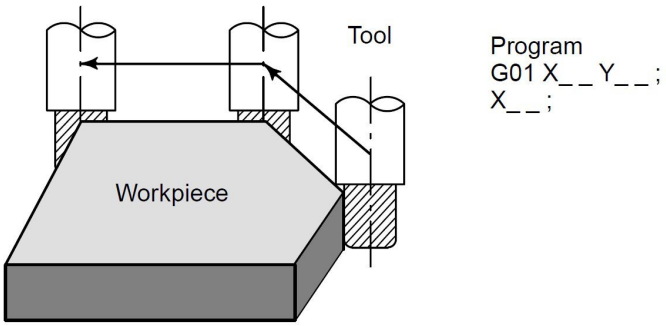

Fig2.1.1 Tool Movement along a line

b)Tool movement along an arc

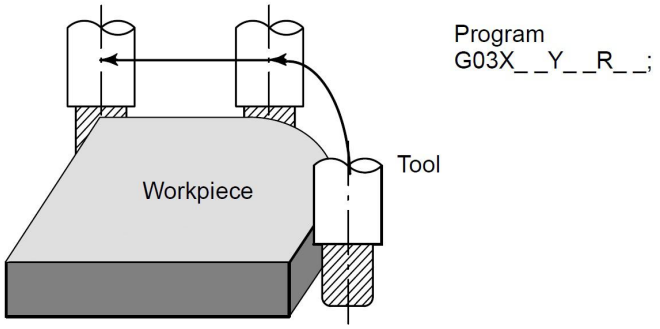

Fig2.1.2 Tool Movement along an arc

Symbols of the programmed commands G01, G02, ... are called the preparatory function and specify the type of interpolation conducted in the control unit.

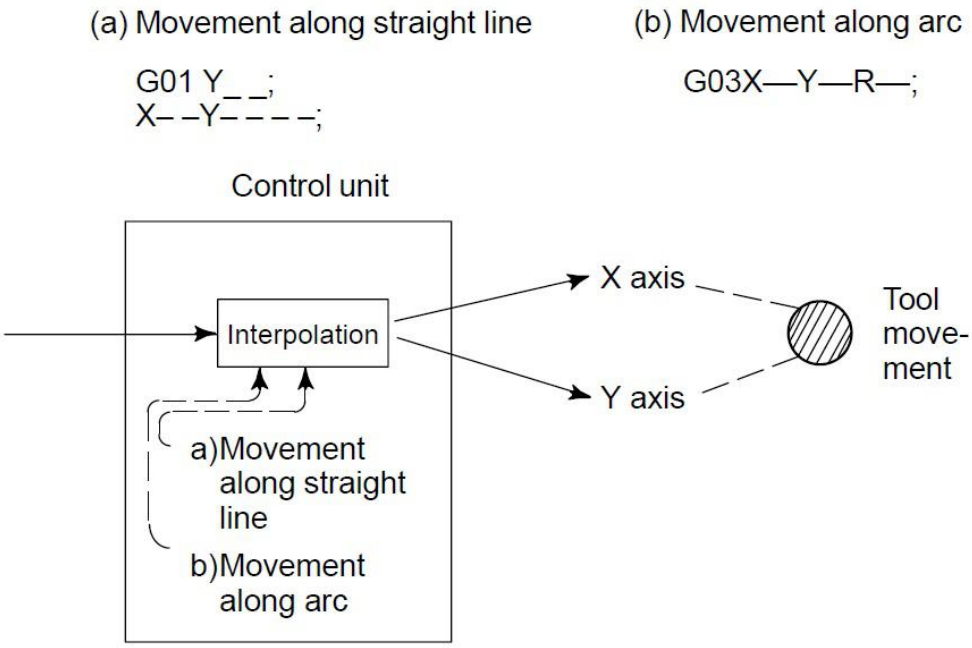

Fig2.1.3 Interpolation

Note: Some machine move tables instead of tools but this manual assumes that tools are moved against workpieces.

2.1.2 Feed Function

Movement of the table at a specified speed for cutting a workpiece is called the feed.

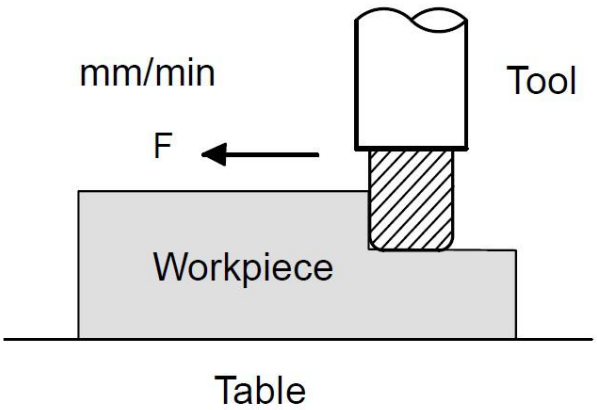

Fig2.1.4 Feed Function

Feedrate can be specified by using actual numerics. For example, to feed the tool at a rate of 150 mm/min, specify the following in the program: F150.0

The function of deciding the feed rate is called the feed function.

2.1.3 Part Drawing And Tool Movement

A CNC machine tool is provided with a fixed position. Normally, tool change and programming of absolute zero point as described later are performed at this position. This position is called the reference position.

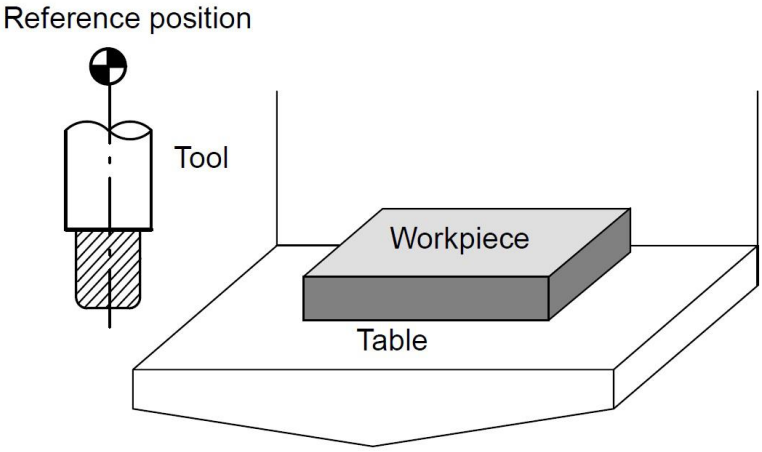

Fig2.1.5 Reference Position

The tool can be moved to the reference position in two ways:

(1) Manual reference position return (See 1.5.4_Book2)
Reference position return is performed by manual button operation.

(2) Automatic reference position return (See 3.10_Book1)
In gereral, manual reference position return is performed first after the power is turned on. In order to move the tool to the reference position for tool change thereafter, the function of automatic reference position return is used.

2.1.4 Coordinate System

Coordinate system on part drawing and coordinate system specified by CNC coordinate system.

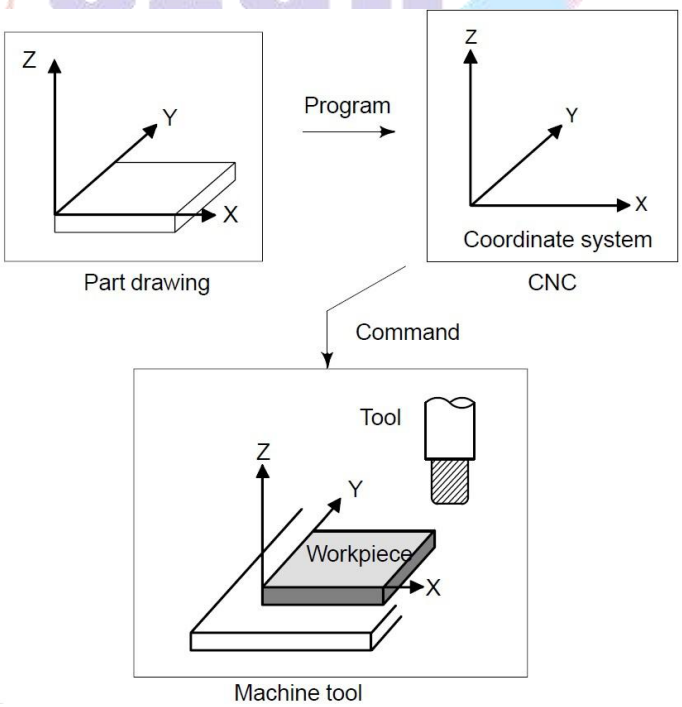

Fig2.1.6 Coordinate System

The following two coordinate systems are specified at different locations:(See 3.14_book1)

(1) Coordinate system on part drawing
The coordinate system is written on the part drawing. As the program data, the coordinate

values on this coordinate system are used.

(2) Coordinate system specified by the CNC

The coordinate system is prepared on the actual machine tool table. This can be achieved by programming the distance from the current position of the tool to the zero point of the coordinate system to be set.

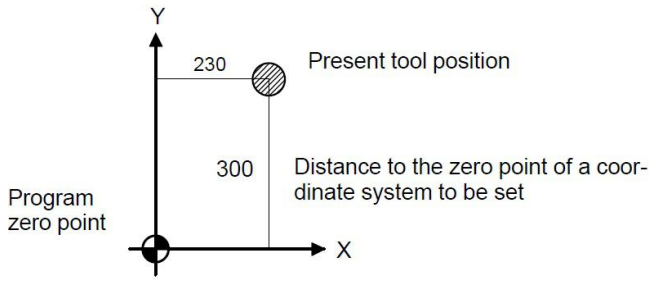

Fig2.1.7 Coordinate system specified by the CNC

The positional relation between these two coordinate system is determined when a workpiece is set on the table.

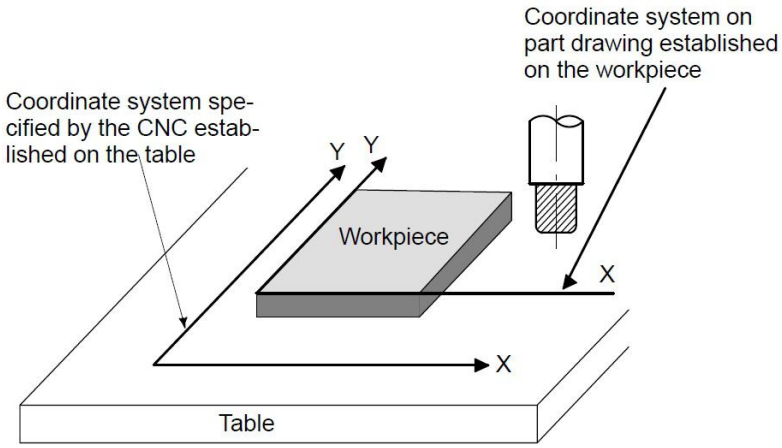

Fig2.1.8 Coordinate system specified by CNC on part drawing

The tool moves on the coordinate system specified by the CNC in acordance with the command program generated with respect to the coordinate system on the part drawing,and cuts a workpiece into a shape on the drawing.

Therefore, in order to correctly cut the workpiece as specified on the drawing, the two coordinate systems must be set at the same position.

To set the two coordinate systems at the same position, simple methods shall be used according to workpiece shape, the number of machinings.

(1) Using a standard plane and point of the workpiece

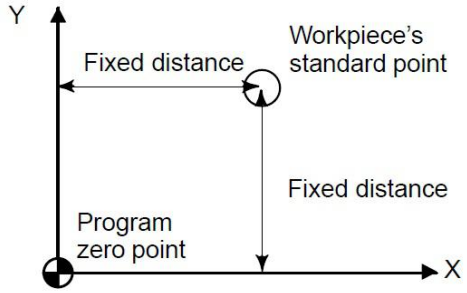

Bring the tool center to the workpiece standard point.
And set the coordinate system specified by CNC at this position

(2) Mounting a workpiece directly against the jig

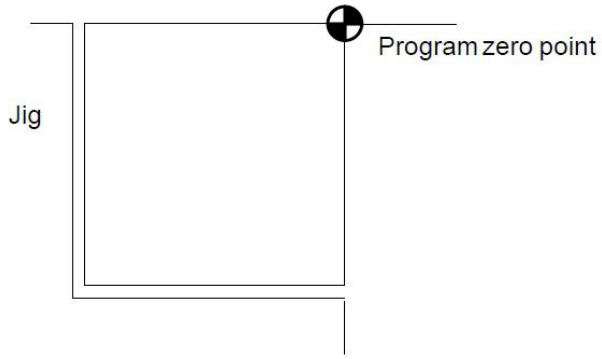

Meet the tool center to the reference position. And set the coordinate system specified by CNC at this position. (Jig shall be mounted on the predetermined point from the reference position.)

(3) Mounting a workpiece on a pallet,then mounting the workpiece and pallet on the jig

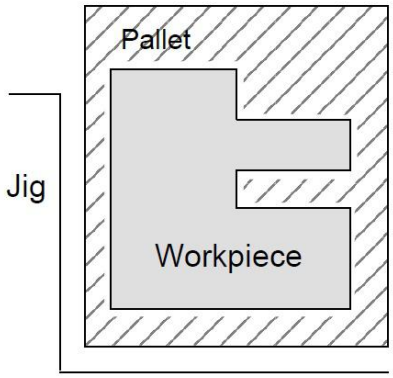

(Jig and coordinate system shall be specified by the same as (2)).

2.1.5 Indicated Command Dimensions for Moving the Tool

Command for moving the tool can be indicated by absolute command or incremental command.(See 3.16_Book1)

(a)**Absolute Command**: the tool moves to a point at "the distance from zero point of the coordinate system" that is to the position of the coordinate values.

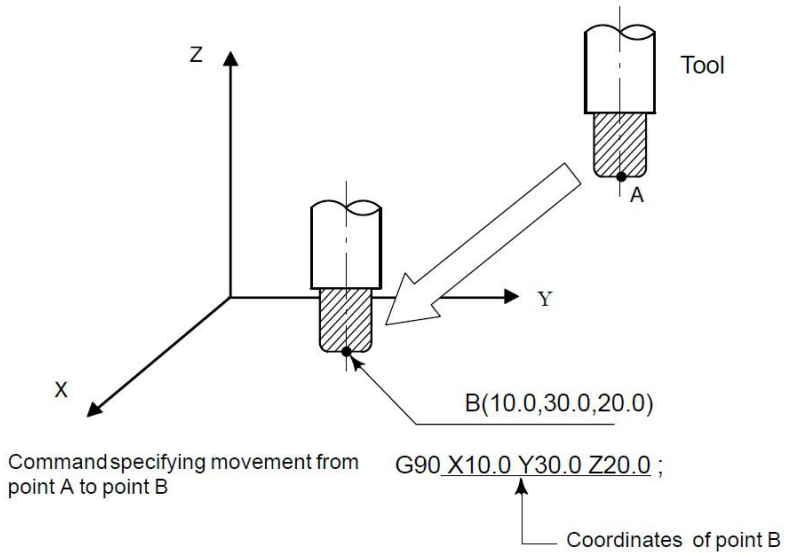

(b)**Incremental Command**: Specify the distance from the previous tool position to the next tool position.

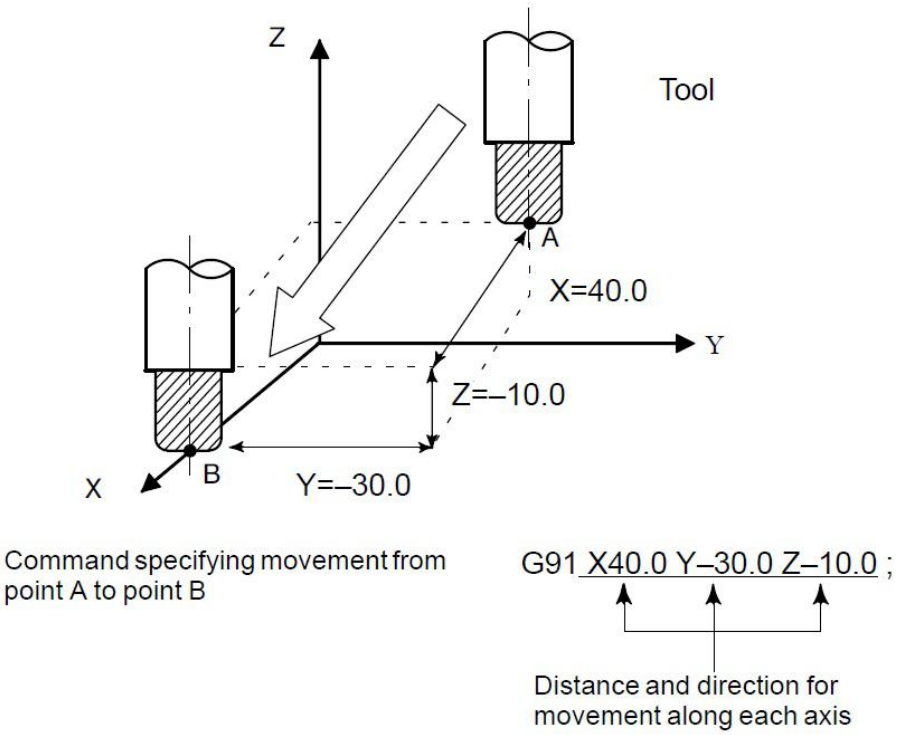

2.1.6 Cutting Speed-Spindle Speed Function

The speed of the tool with respect to the workpiece when the workpiece is cut is called the cutting speed.

As for the CNC, the cutting speed can be specified by the spindle speed in min^{-1} unit.

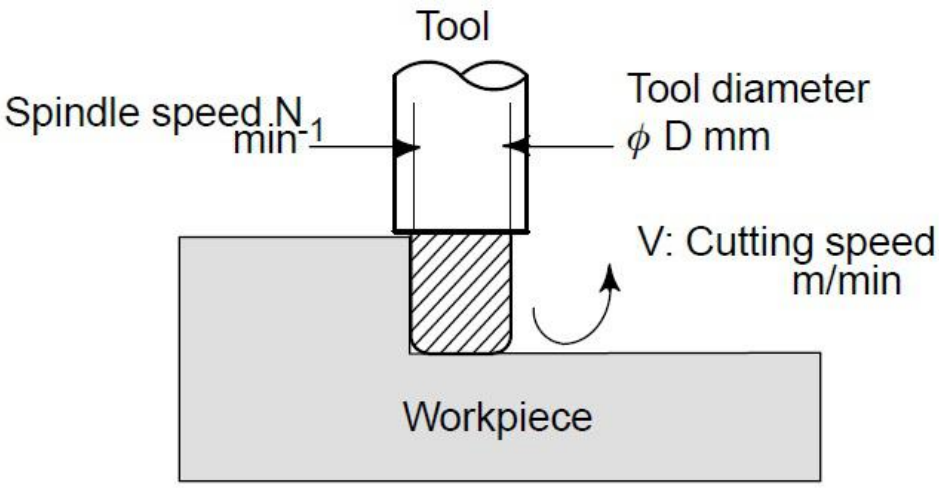

Fig2.1.9 Cutting Speed

<When a workpiece should be machined with a tool 100mm in diameter at a cutting speed of 80m/min.>

The spindle speed is approximately 250 min^{-1},which is obtained from N=1000v/πD. Hence the following command is require:

S250;

Command related to the spindle are caled the spindle speed funtion (See 4.4_Book1) .

2.1.7 Tool Function

When drilling, tapping,boring,milling or the like, is performed , it is necessary to select a suitable tool. When a number is assigned to each tool and the number is specified in the program, the cooresponding tool is selected.

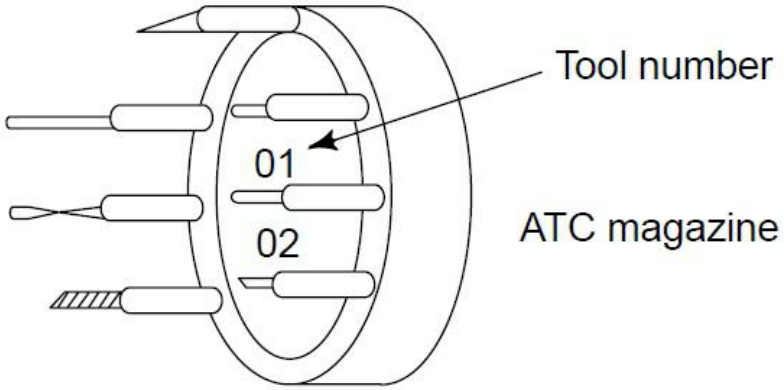

Fig2.1.10 Tool Magazine

<When No.01 is assigned to a drilling tool>

When the tool is stored at location 01 in the ATC magazine, the tool can be selected by specifying T01. This is called the tool function.

2.1.8 Command For Machine Operations

When machining is actually started,it is necessary to rotate the spindle, and feed coolant. For this purpose, On-Off operations of spindle motor and coolant valve should be controlled.

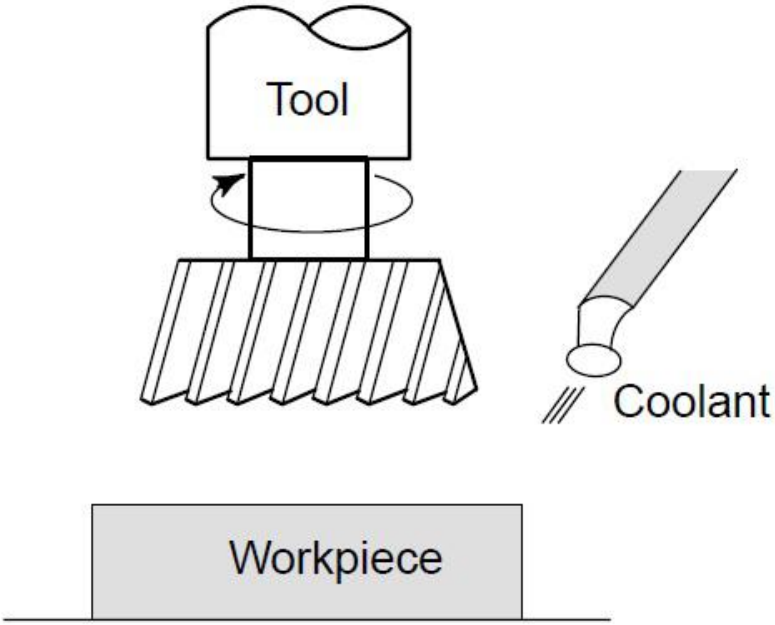

Fig2.1.11 Miscellaneous Function

The function of specifying the On-Off operations of the components of the machine is called the miscellaneous function. In general, the function is specified by an M code(See chapter4_book1)

For example, when M03 is specified, the spindle is rotated clockwise at the specified spindle speed.

2.2 Configuration of Program

A group of commands given to the CNC for operating the machine is called the program. User needs to compile part programs according to instruction formats of CNC system.By specifying the commands, the tool is moved along a straight line or an arc, or the spindle motor is turned on and off.

In the program, specify the commands in the sequence of actual tool movements.

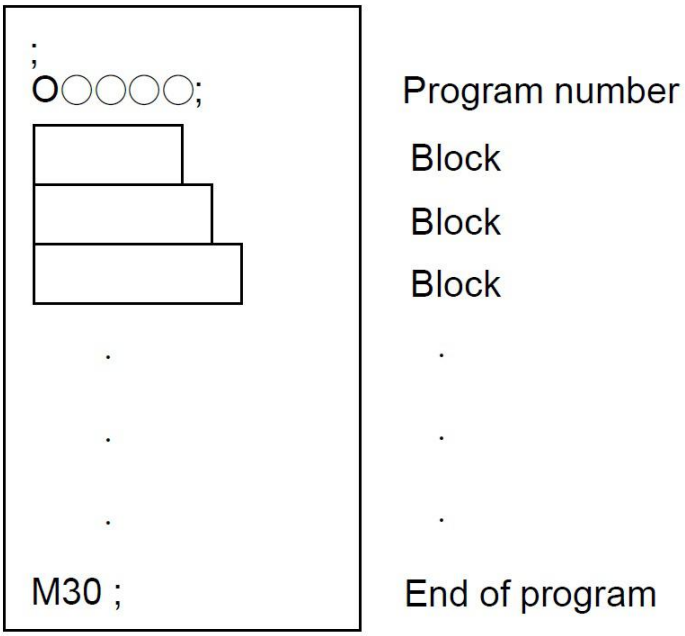

Fig2.1.12 Program Configuration

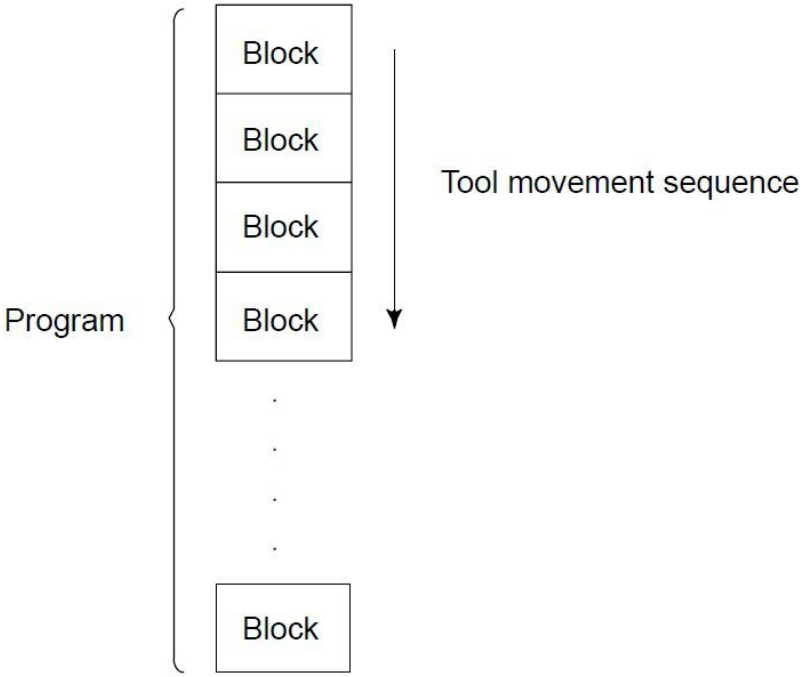

Fig2.1.13 Configuration of Program

Normally, a program number is specified after the end－of－block (;) code at the beginning of the program, and a program end code (M02 or M30) is specified at the end of the program.

See the general structure of program as follows:

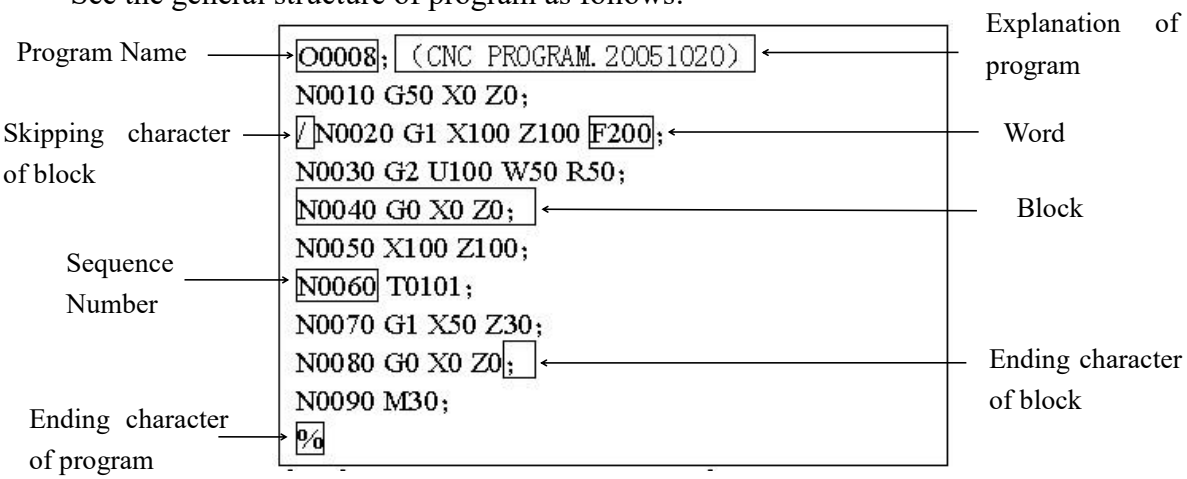

Fig2.28 General Structure of Program

Program Name: consist of alphabet & number (Eg.: O0001). There are countless programs stored in the system.To identify it, each program has only one program name(there is no the same program name).

Note: It doesn't allow exist blank on program name.

A group of commands at each step of the sequence is called the block. The program consists of a group of blocks for a series of machining. The number for discriminating each block is called the sequence number, and the number for discriminating each program is called the program number.

Block: a group of commands at each step of the sequence.

The program consists of a group of blocks for a series of machining. The number for discriminating each block is called the sequence number, and the number for discriminating each program is called the program number.

The block and the program have the following configurations.

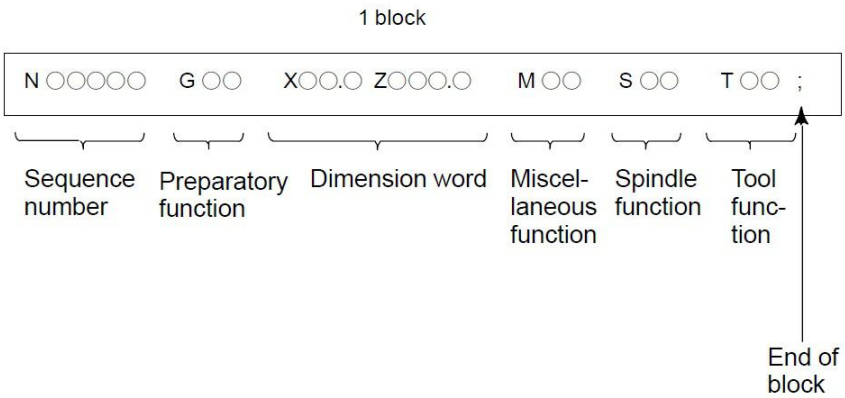

Fig2.29 Block Configuration

A block begins with a sequence number that identifies that block and ends with an end－of－block code.

This manual indicates the end－of－block code by ; (LF in the ISO code and CR in the EIA code).

The contents of the dimension word depend on the preparatory function.

In this manual, the portion of the dimension word may be represent as IP_.

There is only one for other addresses except for N, G, S, T, H, L in one block, otherwise the system alarms. The last word in the same address is valid when there are more N, G, S, T, H, L in

the same block. The last G instruction is valid when there are more G instructions which are in the same group in one block.

Word is the basic instruction unit to command CNC system to complete the control function,composed of an English letter (called instruction address) and the following number (operation instruction with/without sign). The instruction address describes the meaning of its following operation instruction and there may be different meaning in the same instruction address when the different words are combined together. Table 2-1 is Word List of SZGH-CNC990MDc system.

Functions	Address symbol	meaning	Data range
Name of file		Name of machining workpiece	0-9, A-Z
Program segment No.	N	No. of program segment	0000-9999
Preparation function	G	Content and mode of designated instruction operation	00-99
Auxiliary function	M	Auxiliary operation instruction	00-99
Tool chosen	T H D	No. /compensation of Tool	01-99
Spindle function	S	Set the speed of 1st spindle;	0-99999
	SS	Set the speed of 2nd spindle;	
Cutting speed	F	Speed per minute	0.01-15m/m
Coordinates character	X Y Z A	The coordinates value of X Y Z A axes.	+/-99999.999mm
Core coordinates	I J K	X Z axes and Z axes core coordinate increment value	+/-99999.999mm
Step length	R	Circular arc radius	0.001-99999.999mm
Delay time	P,X	Designated delay time of G04	0.001-65s
Program entrance	P	Entrance of calling program name	0000-9999
Repeat times	L	Times of cycle or subprogram calling	1-9999
Line skip	/	No executive program when “/” is in front of program line	P9_D12 in Other parameter:shield the function

Attention 1:“-”means this data can be use.

Attention 2:In front of the numeral is 0, indicated this data only write the effective data.

Attention 3:The digital presentation is a figure, when is two, top digit expression integer figure biggest figure, after low position expresses decimal point most imperial throne.

2.3 Main Program & Subprogram

When machining of the same pattern appears at many portions of a program, a program for the pattern is created. This is called the subprogram. On the other hand, the original program is called the main program. When a subprogram execution command appears during execution of the main program, commands of the subprogram are executed. When execution of the subprogram is finished, the sequence returns to the main program.

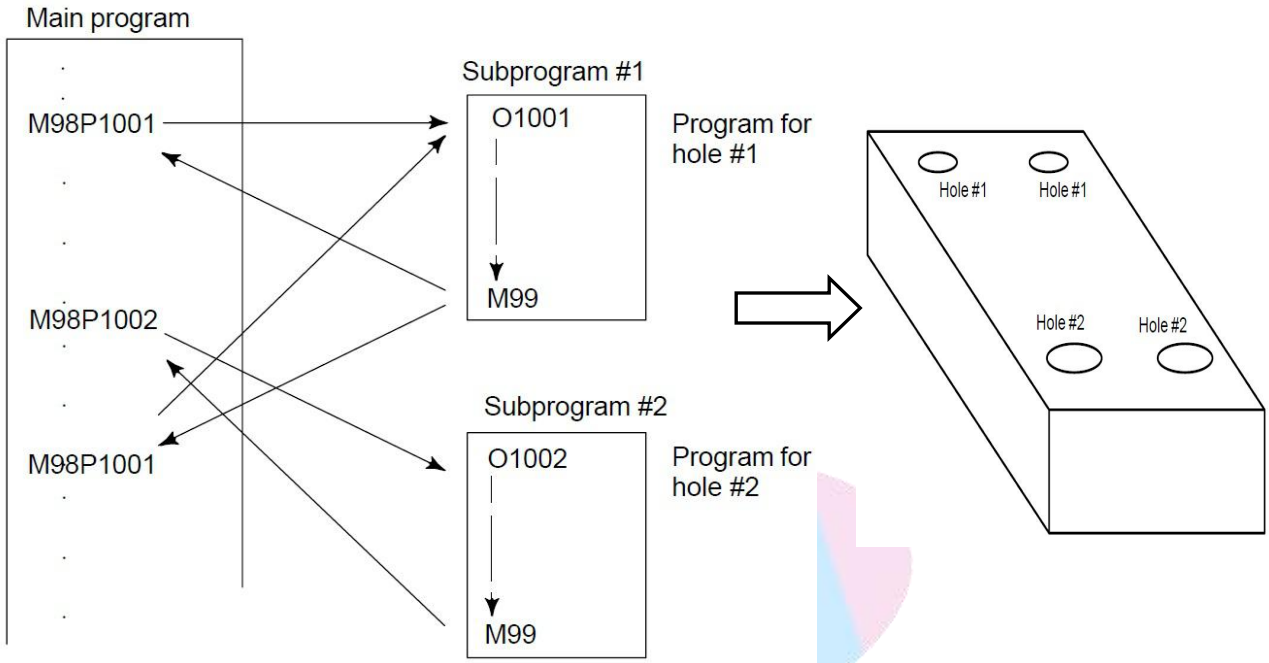

2.4 Program Run

Press “Program” key, Select Processing Program

⇩

Excute: Press “C” key : “Excut”,system will jump to mn screen.

⇩

Switch to Auto Mode:Press “AUTO” Key

⇩

Run Program: Press “Start” Button

Suggestion:Before running program,please compile program ,and ensure program is right.

2.5 Tool Figure And Tool Motion By Program

Machining using the end of cutter--tool length compensation function.(See 3.24)

Usually, several tools are used for machining one workpiece. The tools have different tool length. It is very troublesome to change the program in accordance with the tools.

Therefore, the length of each tool used should be measured in advance. By setting the difference between the length of the standard tool and the length of each tool in the CNC (data display and setting: See 3.24), machining can be performed without altering the program even when the tool is changed. This function is called tool length compensation.

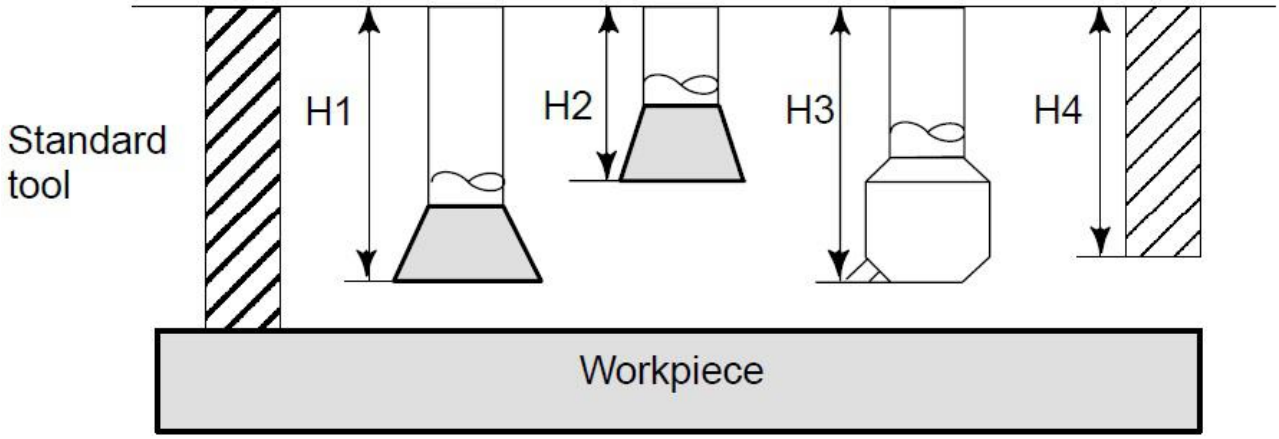

Fig2.5.1 Tool Length Compensation

Machining using the side of cutter -- Cutter Compensation Function

Because a cutter has a radius,the center of the cutter path goes around the workpiece with the cutter radius deviated.

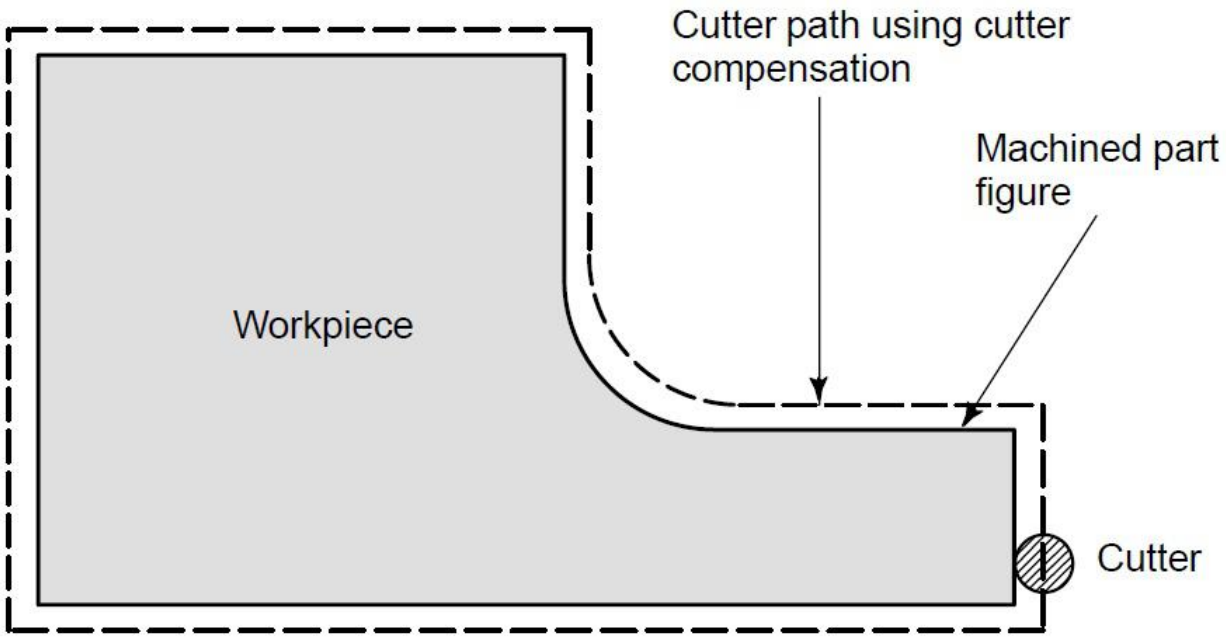

Fig2.5.2 Tool Radius Compensation

If radius of cutters are stored in the CNC(Data display and Setting: See 2.8_book2), the tool can be moved by cutter radius apart from the machining part figure. This function is called cutter

compensation, also tool radius compensation.

2.6 Tool Movement Range-Stroke

Limit switches are installed at the ends of each axis on the machine to prevent tools from moving beyond the ends. The range in which tools can move is called the stroke.

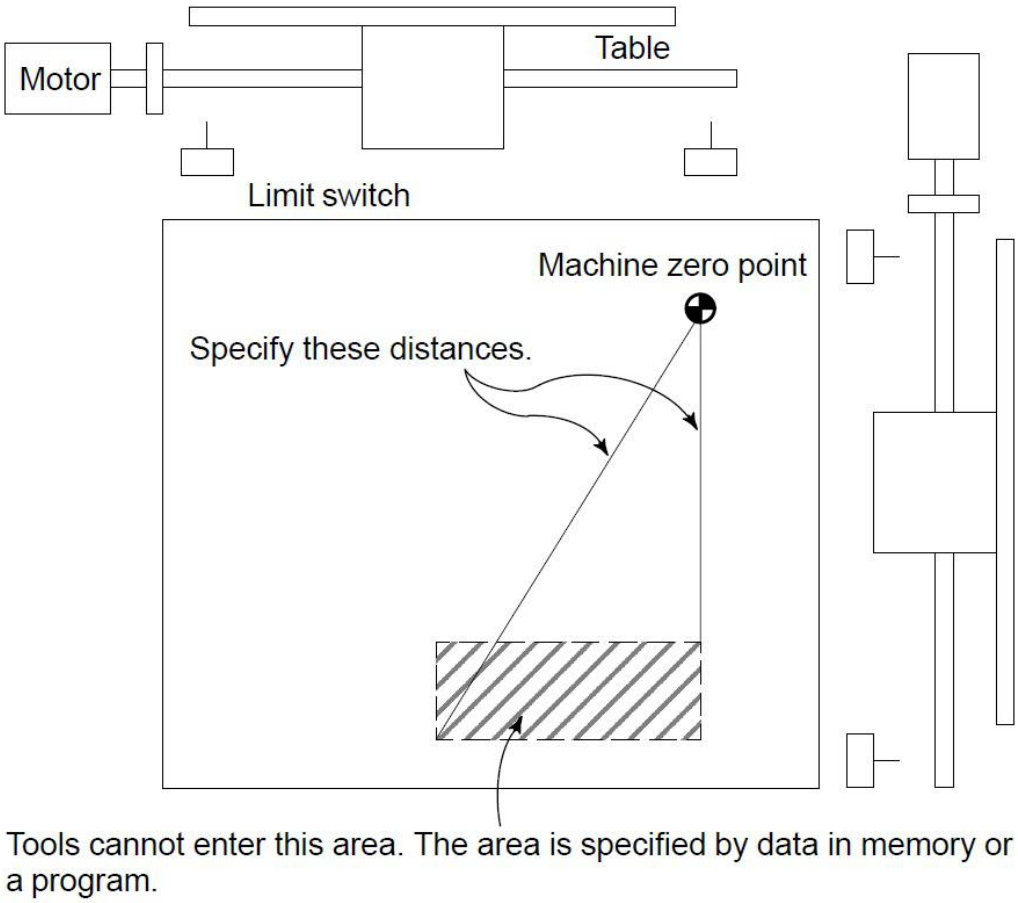

Fig2.6.1 Stroke

Besides strokes defined with limit switches, the operator can define an area which the tool cannot enter using a program or data in memory. This function is called stroke check. (See1.9.6_book2)

Chapter 3 G INSTRCUTIONS

3.1 INTRODUCTION

G instruction consists of instruction address G and its following 1～3 bits instruction value, used for defining the motion mode of tool relative to the workpiece, defining the coordinates and so on. Refer to G instructions as Table 3.

G □□

→ Instruction value(00~999,the leading zero can be omitted)

→ Instruction address G

A number of following address G determines the meaning of the comand for the concerned block.

G codes are divided into the following two types

Type	Meaning
One-shot G code	The G code is effective only in the block in which it is specified
Modal G code	The G code is effective unti another G code of the same group is specified.

Eg.: G01 and G00 are modal G codes.

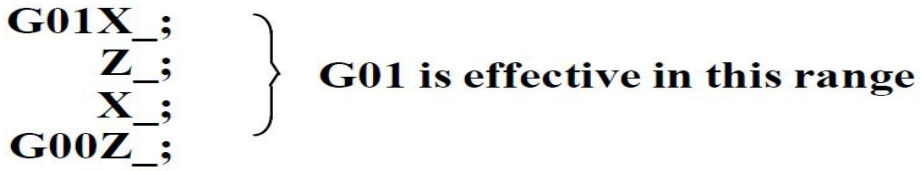

3.2 G Code List

1. If CNC enters the clear state ,also when the power is turned on or CNC is reset, the modal G codes change as follows.

1) G codes marked with “ □ ” in Table 3 are enabled ,which is initial modal codes.

2) When system is cleared due to power-on or reset,which ever specified, either G20 or G21 , remains effective.

2. G codes of group 00 are single-shot G codes.

3. G codes of different groups can be specified in the same block.

If G codes of the same group are specified in the same block,the G code specified last is valid.

4. G codes of different groups can be specified in the same block.

If G codes of the same group are specified in the same block, the G code specified last is valid.

5. If a G code of group 01 is specified in a canned cycle, the canned cycle is canceled in the same way as when a G80 command is specified. G codes of group 01 are not affected by G codes for specifying a canned cycle.

6. G codes are displayed for each group number.

7. When a G code not listed in the G code list is specified or a G code that corresponding function is disabled.

Table 1 Standard G Code List

Word	Ground	Functions	Page
G00	01	Positioning(Rapid Traverse)	
G01		Linear Interpolation(Cutting feed)	
G02		Circular Interpolation CW(clockwise)	
G03		Circular Interpolation CCW(counter clockwise)	
G04	00	Dwell,Exact stop	
G06		3D Space Arc Interpolation	
G11	12	Programmable mirror image	
G12		Programmable mirror image cancel	
G15	11	Polar coordinate interpolation cancel mode	
G16		Polar coordinate interpolation mode	
G17	02	XpYp plane selection	
G18		ZpXp plane selection	
G19		YpZp plane selection	
G20	06	Input in Inch	
G21		Input in mm	
G22	08	Program Block Cycle	
G800		Program Block Cycle Cancel	
G25	00	Save value of current coordinate	
G26		ALL-Axis go starting point	
G261		X-Axis go starting point	
G262		Y-Axis go starting point	
G263		Z-Axis go starting point	
G264		A-Axis go starting point	
G28		Return to reference position	
G281		X-Axis return to reference position	
G282		Y(C)-Axis Return to reference position	
G283		Z-Axis Return to reference position	
G284		A-Axis Return to reference position	
G30		Return to zero point of coordinate	
G301		X-axis Return to zero point of coordinate	
G302		Y-axis Return to zero point of coordinate	
G303		Z-axis Return to zero point of coordinate	
G304		A-axis Return to zero point of coordinate	
G31		Skip function (No alarm)	
G311		Skip function (alarm)	
G36	12	Scaling	
G37		Scaling Cancel	
G40	07	Tool nose radius compensation cancel	
G41		Tool nose radius compensation left	
G42		Tool nose radius compensation right	
G43	08	Tool lengthen compensation + direction	

G44		Tool lengthen compensation - direction	
G45	00	Tool offset increase	
G46		Tool offset decrease	
G47		Tool offset double increase	
G48		Tool offset double decrease	
G49		Tool length compensatation cancel	
G50	00	Coordinate system setting or max. spindle speed setting	
G52		Local coordinate system setting	
G53		Machine Coordinate System	
G54	14	Workpiece Coordinate System-1 Selection	
G55		Workpiece Coordinate System-2 Selection	
G56		Workpiece Coordinate System-3 Selection	
G57		Workpiece Coordinate System-4 Selection	
G58		Workpiece Coordinate System-5 Selection	
G59		Workpiece Coordinate System-6 Selection	
G61	04	Return G25 coordinate of G25	
G611		Return the coordinate position of X-Axis in G25	
G612		Return the coordinate position of Y(C)-Axis in G25	
G613		Return the coordinate position of Z-Axis in G25	
G614		Return the coordinate position of A-Axis in G25	
G60	04	Exact Stop & Positioning	
G64		Continous Path Processing	
G65	00	Macro calling	
G66	12	Macro modal call	
G67		Macro modal call cancel	
G68	13	Coordinate rotation	
G69		Coordinate rotation cancel	
G73	09	Pecking Drilling Cycle	
G74		Pattern Repeating Cycle	
G76		Fine Boring Cycle	
G80		Canned cycle cancel/external operation function cancel	
G81		Drilling Cycle, spot boring cycle or external operationa function	
G82		Drilling Cycle or counter boring cycle	
G83		Peck drilling cycle	
G84		End Face Peck Drilling	
G85		Finishing Cycle	
G86		Axial Roughing Turning Cycle	
G87		Back Boring Cycle	
G89		Radial Roughing Facing Cycle	
G90	03	Absolute programming	
G91		Incremental programming	
G94	04	Feed per minute	
G95		Feed per revolution	

G96	15	Constant surface speed control	
G97		Constant surface speed control cancel	
G98	10	Return to initial point in canned cycle	
G99		Return to R point in canned cycle	

Table 2 Special G Code List

G110	09	CCW Inner Round groove roughing	
G111		CW Inner Round groove roughing	
G112		Finishing in CCW full circle	
G113		Finishing in CW full circle	
G114		CCW outer circle finishing	
G115		CW outer circle finishing	
G116		CCW outer circle groove roughing	
G117		CW outer circle groove roughing	
G120		Tool changing for linear tool magazine	
G121		Tool changing for umbrella tool magazine(A-axis)	
G122		Tool changing for umbrella tool magazine(A-axis)	
G132		CCW rectangle outer roughing	
G133		CW rectangle outer roughing	
G134		CCW rectangle groove roughing	
G135		CW retecangle groove roughing	
G136		CCW rectangle groove finishing	
G137		CW rectangle groove finishing	
G138		CCW rectangle outer finishing	
G139		CW rectangle outer finishing	

3.3 Positioning (Rapid Traverse) (G00)

G00 command moves a tool to the position in the workpiece system specified with an absolute or an incremental command at a rapid traverse rate.

In the absolute command, coordinate value of the end point is programmed.

In the incremental command the distance the tool moves is programmed.

Format: G00 X(U)_ Z(W)_ Y/C(V)_ A_ ;

Either of the following tool paths can be selected according to P9_D6 (Bit 6 of No.9 parameter) in Other parameter.

Nonlinear interpolation positioning

The tool is positioned with the rapid traverse rate for each axis separately. The tool path is normally straight.

Linear interpolation positioning

The tool path is the same as in linear interpolation (G01). The tool is positioned within the shortest possible time at a speed that is not more than the rapid traverse rate for each axis. However, the tool path is not the same as in linear interpolation (G01).

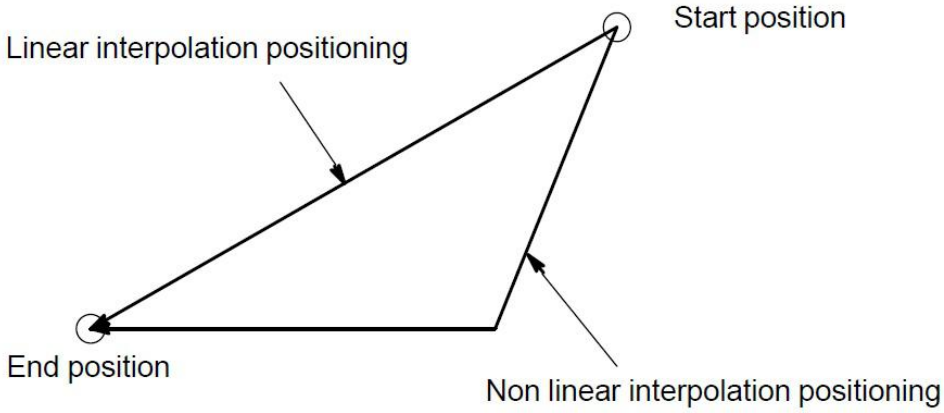

Fig3.3.1 Mode of Tool Path

P1 & P2 & P3 in Speed parameter is set for rapid traverse rate in the G00 command for each axis independently.

The speed rate of G00 can be divided into 5%～100%, total six gears, it can be selected by the key on panel.

G00 is mode instruction, when the next instruction is G00 too, it can be omitted.G00 can be written G0.

In the positioning mode actuated by G00, the tool is accelerated to a predetermined speed at the start of a block and is decelerated at the end of a block.Execution proceeds to the next block after confirming the in-position, which means that the feed motor is within the specified range.

Note: 1. When Rotary Axis positioning in absolute programing, G00 is actuated with nearest path ; when in incremental programing, G00 is actuated with arithmetic path.

2. The rapid traverse rate cannot be specified in the address F.

3. Even if linear interpolation positioning is specified, nonlinear interpolation positioning is used in the following cases. Therefore, be careful to ensure that the tool does not foul the workpiece.

- ***G28 specifying positioning between the reference and intermediate positions.***
- ***G53***

3.4 Linear Interpolation (G01)

A tools move along a line to the specified position at the feedrate specified in F.

Format: G01 X/U_ Z/W_ Y(C)/V_ A_ F_ ;

X,Z,Y(C), A means motion axis.For an absolute command, the coordinates of an end point , and for an incremental command, the distance the tool moves.

F: Speed of tool feed(Feedrate)

The feedrate specified in F is effective until a new value is specified. It need not be specified for each block.

The feedrate commanded by the F code is measured along the tool path.

If the F code is not commanded, the feedrate is regarded as zero.

For feed–per–minute mode under 2–axis simultaneous control, the feedrate for a movement along each axis as follows :

$$\mathbf{G01}\,\alpha\underline{\alpha}\beta\underline{\beta}\gamma\underline{\gamma}\zeta\underline{\zeta} \quad F\underline{f};$$

Feed rate of α axis direction : $F\alpha = \frac{\alpha}{L} \times f$

Feed rate of β axis direction : $F_\beta = \frac{\beta}{L} \times f$

Feed rate of γ axis direction : $F\gamma = \frac{\gamma}{L} \times f$

Feed rate of ζ axis direction : $F_\zeta = \frac{\zeta}{L} \times f$

$$L = \sqrt{\alpha^2 + \beta^2 + \gamma^2 + \zeta^2}$$

The feedrate of the rotary axis is command in the unit of deg/min (the unit is decimal point positoin)

When the straight line axis α (such as X, Y, or Z) and the rotating axis β (such as A, B, or C) are linearly interpolated, the feed rate is that in which the tangential feed rate in the α & β cartesian coordiante system is commanded by F (mm/min).

β-axis feedrate is obtained; at first, the time required for distribution is calculated by using the above fromula, then the β-axis feedrate unit is changed to deg/min.

A calculation example is as follow.

G91 G01 X20.0 A40.0 F300.0

This changes the unit of the A axis from 40.0 deg to 40mm with metric input. The time required for distribution is calculated as follow:

$$\frac{\sqrt{20^2 + 40^2}}{300} \approx 0.14907(\text{min})$$

The feedrate for the C axis is $\frac{40}{0.14907} \approx 268.3\,\text{deg/min}$

In simultaneous 3 axes control, the feedrate is calculated the same way as in 2 axes control.

Example1: **(G91) G01 X200.0 Y100.0 F200.0 ;**

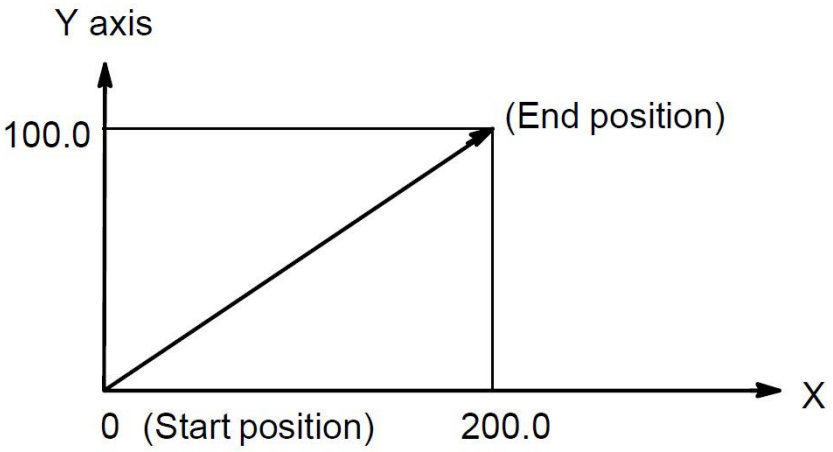

Example2: G91 G01 A-90.0 G300.0 ; Feedrate of 300deg/min

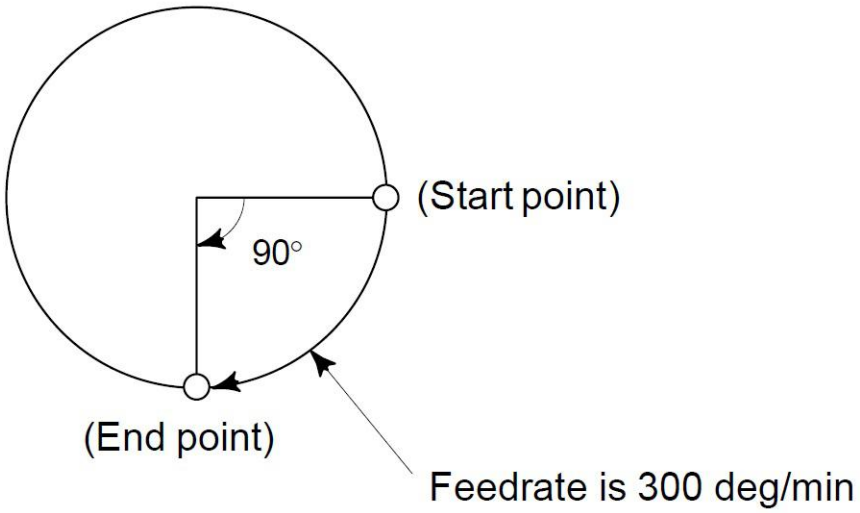

G01 instruction can also specify movemtn of X-axis/Y-axis/Z-axis separately.

G01 is F feed rate can be motivated by the panel to override adjusted up or down to adjust the range (0% -150%).

G01 instruction can also be directly written G1.

3.5 Circular Interpolation (G02/G03)

These commands will move a tool along a circular arc.

Format: Arc in the XpYp plane

$$G17 \left\{ \begin{matrix} G02 \\ G03 \end{matrix} \right\} Xp_Yp_ \left\{ \begin{matrix} I_J_ \\ R_ \end{matrix} \right\} F_;$$

Arc in the ZpXp plane

$$G18 \left\{ \begin{matrix} G02 \\ G03 \end{matrix} \right\} Xp_Zp_ \left\{ \begin{matrix} I_K_ \\ R_ \end{matrix} \right\} F_$$

Arc in the YpZp plane

$$G19 \left\{ \begin{matrix} G02 \\ G03 \end{matrix} \right\} Yp_Zp_ \left\{ \begin{matrix} J_K_ \\ R_ \end{matrix} \right\} F_$$

Code	Description
G17	Specification of arc on XpYp plane
G18	Specification of arc on ZpXp plane(Default)
G19	Specification of arc on YpZp plane
G02	Circular Interpolation Clockwise direction (CW)
G03	Circular Interpolation Counterclockwise direction (CCW)
X/Z/Y	Position of end point in workpiece coordinate
U/W/V	Distance from start point to end point
I	X axis distance from start point to center of an arc with sign(radius value)
K	Z axis distance from start point to center of an arc with sign(radius value)
J	Y axis distance from start point to center of an arc with sign(radius value)
R	Arc radius with sign (always with radius value)
F	Feedrate along the arc

Direction of circular interpolation: “Clockwise”(G02) and “Counter clockwise”(G03) on the XpYp plane(ZpXp plane or YpZp plane) are defined when the XpYp plane is viewed in the positive to negative direction of the Zp axis (Yp axis or Xp axis respecitively) in the Cartesian coordinate system, See the figure below.

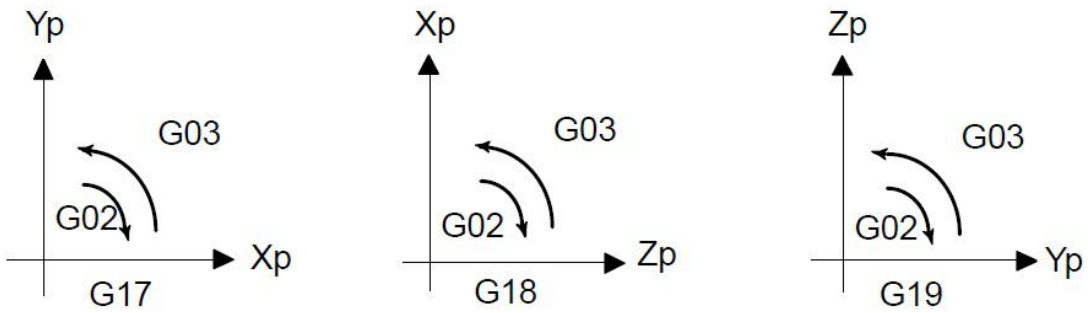

Fig3.5.1 Direction of G02&G03 at different plane

Distance moved on an arc: The end point of an arc is specified by address Xp , Yp or Zp, and is expressed as an absolute or incremental value according to G90 or G91. For the incremental value, the distance of the end point which is viewed from the start point of the arc is specified.

Distance from the start point to the center of arc: The arc center is specified by addresses I, J and K for the Xp, Yp and Zp axes, respectively. The numerical value following I, J or K, however, is a vector component in which the arc center is seen from the start point, and is always specified as an incremental value irrespective of G90 and G91, as shown below.

I, and K must be signed according to the direction.

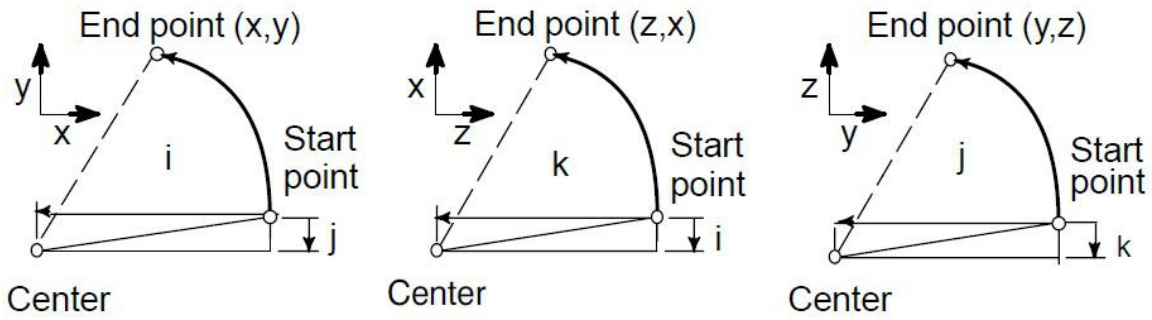

Fig3.5.2 Define & Direction of I, J & K

I0, J0 and K0 can be omitted.

If the distance is from the end point to the center of arc , which exceeds by the value in a parameter of P41 in Speed parameter(Original value+4).

Full–circle programming: When Xp , Yp and Zp are omitted (the end point is the same as the start point) and the center is specified with I, J and K, a 360° arc (circle) is specified.

Arc radius: The distance between an arc and the center of a circle that contains the arc can be specified using the radius, R, of the circle instead of I, J and K. In this case, one arc is less than 180°, and the other is more than 180° are considered. When an arc exceeds 180° is commanded, the radius must be specified with a negative value. If Xp, Yp and Zp are all omitted, if the end point is located at the same position as the start point and when R is used, an arc of 0° is programmed.

G02R ; (The cutter does not move.)

For arc (1) [Less than 180º]
G91 G02 X_p60.0 Y_p20.0 R50.0 F300.0;

For arc (2) [Greater than 180º]
G91 G02 X_p60.0 Y_p20.0 R-50.0 F300.0;

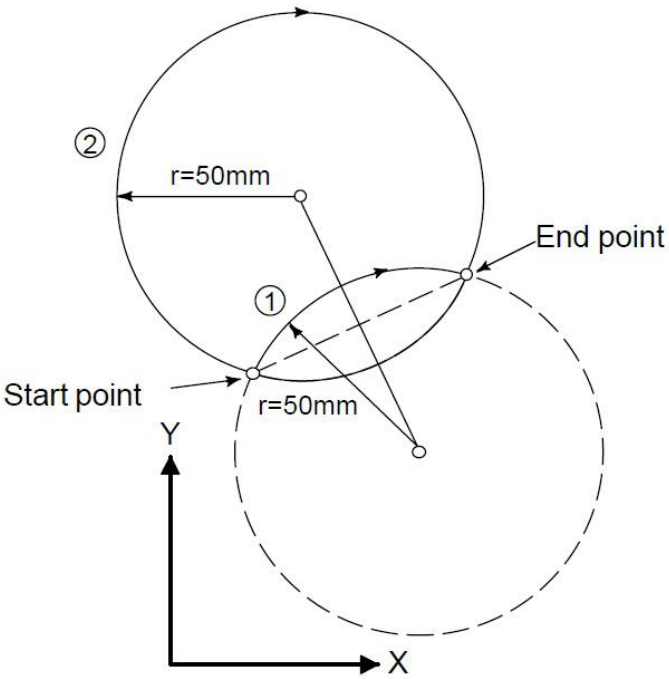

Feedrate: The feedrate in circular interpolation is equal to the feed rate specified by the F code, and the feedrate along the arc(the tangential feedrate of the arc) is controlled to be the specified feedrate.

The error between the specified feedrate and the actual tool feedrate is ±2% or less. However, this feed rate is measured along the arc after the cutter compensation is applied.

Note: 1.When I = 0 , J = 0 or K = 0, they can be omitted; one of I, K or R must be input, otherwise the system alarms.

2.If I,J,K, and R addresses are specified simultaneously, the arc specified by address R takes precedence and the other are ignored.

3.Processing arc workpiece usually use ball tool(arc tool) in the actual process, it must use function of tool radius compensation in programming, that's G41 G42 instruction.

4.Arc path can be more than and less than 180° when R is commanded, the arc is more than180° when R is negative, and it is less than or equal to 180 ° when R is positive.

5.If an axis not comprising the specified plane is commanded, an alarm is displayed.

6.When an arc having a center angle approaching 180º is specified, the calculated center coordinates may contain an error. In such a case,specify the center of the arc wih I,J,and K.

Example:

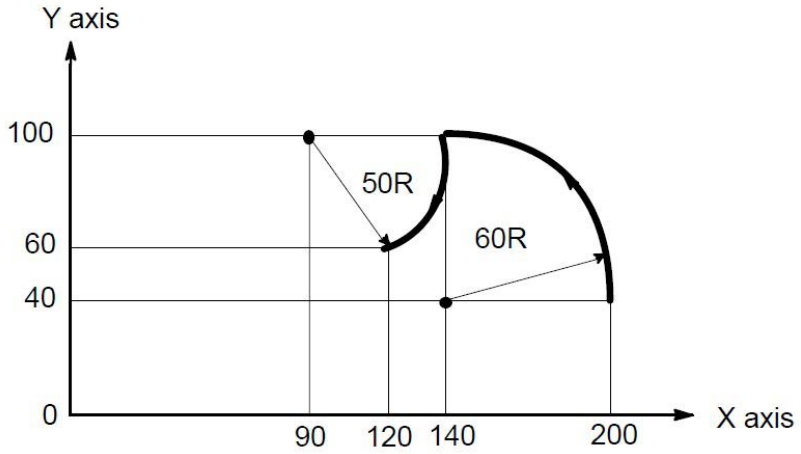

The above tool path can be programmed as follows:

(1) In absolute programming

G92 X200.0 Y40.0 Z0 ;
G90 G03 X140.0 Y100.0 R60.0 F300.;
G02 X120.0 Y60.0 R50.0 ;
Or
G92 X200.0 Y40.0 Z0 ;
G90 G03 X140.0 Y100.0 I-60.0, F300. ;
G02 X120.0 Y60.0 I-50.0 ;

(2) In incremental programming

G92 G03 X-60.0 Y60.0 R60.0 F300. ;
G02 X-20.0 Y-40.0 R50.0

Or

G91 G03 X-60.0 Y60.0 I-60.0 F300. ;
G02 X-20.0 Y-40.0 I-50.0

3.6 Helical Interpolation (G02/G03)

Helical interpolation which moved helically is enabled by specifying up to two other axes which move synchronously with the circular interpolation by circular commands.

Format:

Synchronously with arc of XpYp plane

$$G17 \left\{ \begin{matrix} G02 \\ G03 \end{matrix} \right\} Xp_Yp_ \left\{ \begin{matrix} I_J_ \\ R_ \end{matrix} \right\} \alpha_(\beta_)F_;$$

Synchronously with arc of ZpXp plane

$$G18 \left\{ \begin{matrix} G02 \\ G03 \end{matrix} \right\} Xp_Zp_ \left\{ \begin{matrix} I_K_ \\ R_ \end{matrix} \right\} \alpha_(\beta_)F_;$$

Synchronously with arc of YpZp plane

$$G19 \left\{ \begin{matrix} G02 \\ G03 \end{matrix} \right\} Yp_Zp_ \left\{ \begin{matrix} J_K_ \\ R_ \end{matrix} \right\} \alpha_(\beta_)F_;$$

α,β: Any one axis where circular interpolation is not applied.
Up to two other axes can be specified.

The command method is to simply or secondary add a moe command axis which is not circular interpolation axes. An F command specifies a feed rate along a circular arc. Therefore, the feed rate of the linear axis is as follows:

$$F * \frac{Length_of_Linear_Axis}{Length_of_Circular_Arc}$$

Determine the feed rate so the linear axis feed rate does not exceed any of the various limit values. Cutter compensation is applied only for a circular arc.Tool offset and tool length compensation cannot be used in a block in which a helical interpolation is commanded.

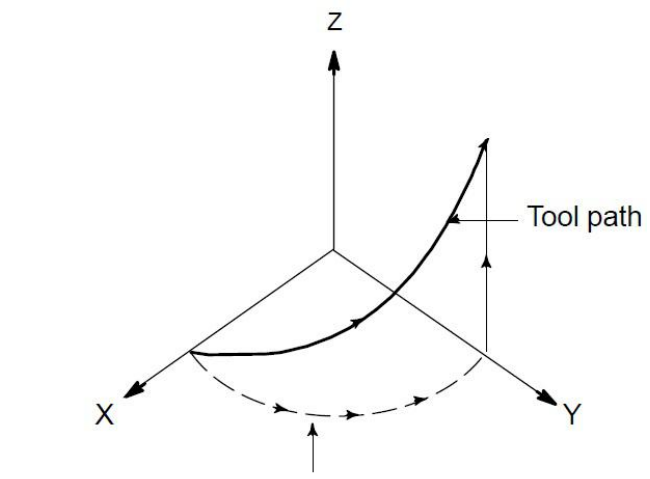

The feedrate along the circumference of two circular interpolated axes is the specified feedrate.

3.7 3D Space Arc Interpolation G06

When user don't know position of circle center & radius, but know coordinate position of 3 points on arc, now user can use G06 code to processing arc, and direction is decided by middle point between starting point & end point.

Format: G06 X_ Y_ Z_ I_ J_ K_ F_

G06: Modal command

I: Increment Coordiante Value of Middle point relative to starting point in X direction
Radius Designation, with direction;

J: Increment Coordiante Value of Middle point relative to starting point in Y direction
With direction

K: Increment Coordiante Value of Middle point relative to starting point in Z direction
With direction

F: Cutting speed

Note:

1. Middle point is any position point except starting point & end point.

2. System will alarm when three points are at one line.

3. When I,J,K are omitted, default value is I=0, J=0, K=0. But they cannot be omitted all at same time,otherwise system will alarm.

4. The meanings of I,J,K are similar to I,J,K of G02/G03.

5. G06 cannot be used for processing total round.

6. Compute of G06 command is very large, it only can work smoothly on modbus system, at normal system, it would work not smoothly.

Example:

```
G0 X10 Y28 Z10
G06 X30 Y98 Z10 I5 J-6 K-5 F100
      X130 Y198 Z120 I55 J-86 K-65
G0 X0 Z0
M02
```

3.8 Dwell (G04)

By specifying a dwell, the execution of the next block is delayed by the specified time.

Format: G04 P_ ; or G04 X_; or G04 U_;

P_: Specify a time (decimal point not permitted) , unit: ms (millisecond)

X_: Specify a time (decimal point permitted) , unit: s (second)

U_: Specify a time (decimal point permitted) , unit: s (second)

Example 1:

G04 X1; delay 1s.

G04 P1000; delay 1s.

G04 U1; delay 1s.

Special application: G04 can be as an accurate stop instruction, such as processing corner kinds of workpiece, it appears over cutting sometimes, if use G04 instruction around the corner, it will clear the over cutting.

Example 2:

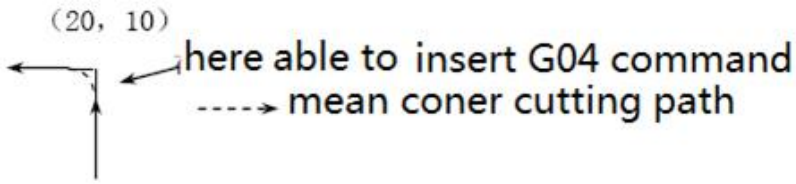

Fig3.22.1 Application of Dwell(G04)

Program: ……

N150 G01 X20 Z10 F100;

N160 G04 P150;（Clear the over cutting）

N170 G01 W-10;

……

Note: Set P21 in User parameter, also by setting intervals between blocks of G01/G02/G03 to clear the over cutting.

3.9 Skip Function(G31,G311)

Linear interpolation can be commanded by specifying axial move following the G31 command, like G01. If an external skip signal is input during the execution of this command, execution of the command is interrupted and the next block is executed.

The skip function is used when the end of machining is not programmed but specified with a signal from the machine, for example, in grinding. It is used also for measuring the dimensions of a workpiece.

For details of how to use this function, refer to the manual supplied by the machine tool builder.

Format: G31 IP_ P_ ;
G311 IP_ P_ ;

G31&G311 are One-shot G code.(It is effective only in the block in which it is specified).

IP_: coordinate value ;

P_ : Specify jumping line number & detecting if input point is valid;

P(a)(b)(c)

a: Jumping line number specfied by " N**" ;when missed, stop running current line, and jump to next block and run;

b: 10 or 20 ; 10 means that when input point is valid, skip to specfied line, when input point is invalid, don't skip, keep on running or alarm hint; 20 means that when input point is invalid, skip to specfied line ; when input point is valid, don't skip , keep on running or alarm hint;

c: Specify detecting input point. address of input point, X00~X39

P 56 10 24 } when Input point X24 is valid, stop running current
a b c liune, jump to N56 block and run.

Difference between G31 & G311: When system don't detect signal of specified input point, G31 don't hint alarm & keep on running program; G311 will hint that don't input is valid & stop running, after Press "Enter", it will go on run program ;

The coordinate values when the skip signal is turned on can be used in a custom macro because they are stored in the custom macro system variable as follows:

#5021 X axis coordinate value
#5022 Third axis (Cs axis) coordinate value
#5023 Z axis coordinate value
#5024 4th axis (A axis) coordinate value

Example: G31 X50 Z100 F100 P**33**1022 ;if X22 is valid then go to **N33**(line no.).
G311 X50 Z100 F100 P2021 ;if X21 is invalid then go to next line.Valid-Alarm.

3.10 Reference Position

A CNC machine tool has a special position where, generally, the tool is exchanged or the coordinate system is set, as described later. This position is referred to as a reference position.

Reference Position Return(G28/G281/G282/G283/G284/G301/G302/G303/G304): The reference position is a fixed position on a machine tool to which the tool can easily be moved by the reference position return function.If there is machine zero point(hardware switch),it is also reference point; when user set float zero point(software switch) as home and system will take float zero point as reference point.

Tools are automatically moved to the reference position via an intermediate position alone a specified axis. Or,tools are automatically moved from the reference position to a specified position via an intermediate position along a specified axis.

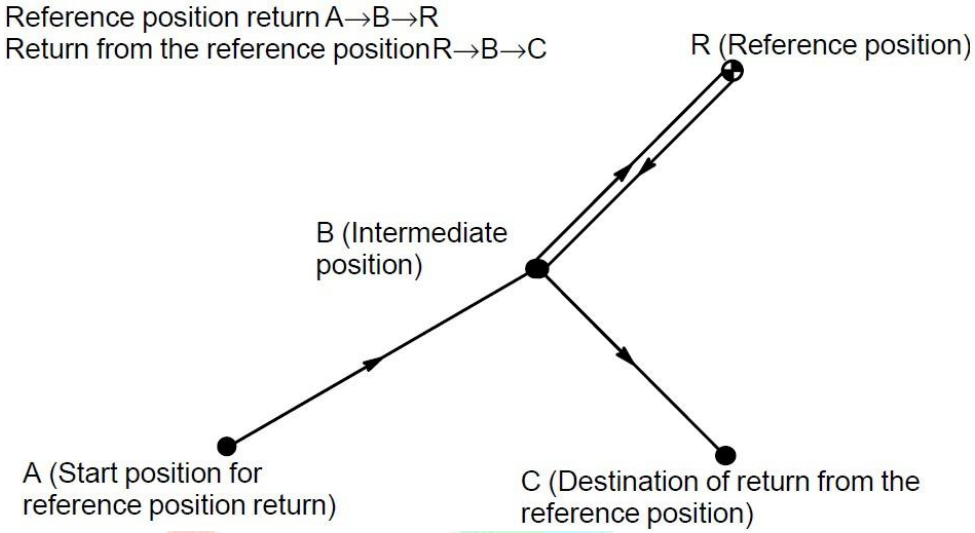

Fig3.9.1 Reference Position Return & Return from Reference Position

Format: G28 X(U)_ Y(V)_ Z(W)_ A_ ; Reference Position Return

X(U)_Y(V)_Z(W)_A_ are intermediate position(Absolute/incremental command).

G281 ; Only X-axis return to reference position
G282 ; Only Y-axis return to reference position,
G283 ; Only Z-axis return to reference position,
G284 ; Only A-axis return to reference position,
G301 ; Only X-axis return to coordiante zero point,
G302 ; Only Y-axis return to coordiante zero point,
G303 ; Only Z-axis return to coordiante zero point,
G304 ; Only A-axis return to coordiante zero point,

Positioning to the intermediate or reference positions are performed at the rapid traverse rate of each axis. Therefore, for safety, the cutter compensation, and tool length compensation should be cancelled before executing this command.

Note:1.When use G28 code to return to reference position, if just specify intermediate position of some axes, which can return to reference position,others axes that don't be specified cannot return to reference position.

2. Before run these codes, reference position must be set well.

3. After return to reference positoin, system will cancel tool compensation automatically.

3.11 Return to Starting Point (G26,G261~G264)

These instructions are used for return back to the starting point of the program.Starting point is coordinate position of N0000 block. The returning speed is same to G00 speed.

Format:

```
G26    ; All Feeding axes return to starting point.
G261   ; X-axis return to starting point
G262   ; Y(C)-axis return to starting point
G263   ; Z-axis return to starting point
G264   ; A-axis reutrn to starting point
```

3.12 Save Current Position (G25)

G25 is used for memory current coordinate position of all axes(XZYA), save current position as specified point.

Format: G25 ; Save current coordinate

3.13 Return to Specified Position (G61,G611~G614)

These instructions are used for return to point specified by G25.

```
G61    ; all axes return to specified point ;
G611   ; X-axis returns to specified point ;
G612   ; Y(C)-axis returns to specified point ;
G613   ; Z-axis returns to specified point ;
G614   ; A-axis returns to specified point ;
```

Note: If user don't use G25 to save current position, these instructions will return to starting point as G26.

Example:

```
N0000  G0 X20   Z80            ;
N0001  G01 U5 W－16 F200       ;
N0002  W－100                  ;
N0003  G00 U10                 ;
N0004  Z80                     ;
N0005  G25                     ; save current positon (X35,Z80)
N0006  G01 U10 W-30            ;
N0007  G0 X100 Z200            ;
N0008  G61                     ; return to (X35,Z80)
N0009  M2                      ; End of program
```

3.14 Coordinate System

By teaching the CNC a desired tool position, the tool can be moved to the position. Such a tool position is represented by coordiantes in a coordiante system. Coordinates are specified using program axes.

When three programming axes, X-axis, Y-axis and Z-axis are used, cordiantes are specified as follows: **X_Y_Z_**

This command is referred to as a dimension word.

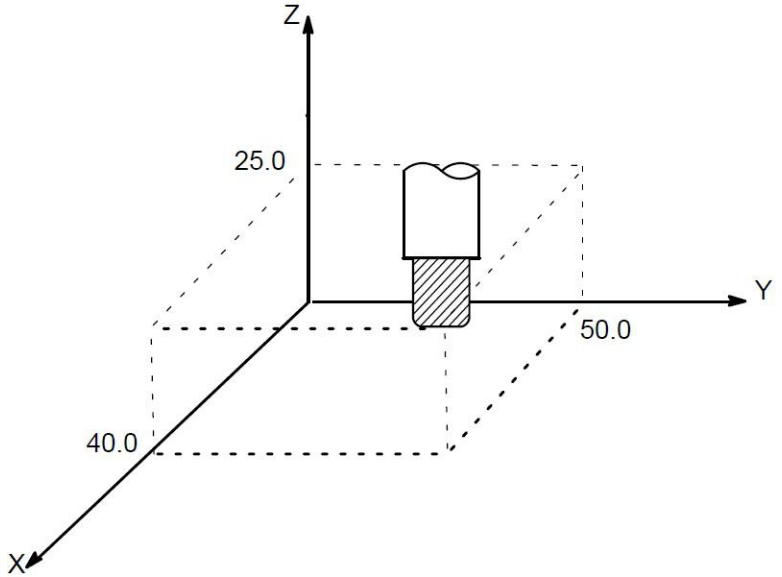

Fig3.10.1 Tool Position specified by X40.0 Y50.0 Z25.0

Coordinates are specified in one of following three coordinate systems:

(1) Machine coordinate system
(2) Workpiece coordinate system
(3) Local coordinate system

The number of the axes of a coordiante system varies from one machine to another. So, in this manual, a dimension word is represented as IP_.

3.14.1 Machine Coordiante System (G53)

The point that is specific to a machine and serves as the reference of the machine is referred to as the machine zero point. A machine tool builder sets a machine zero point for each machine.

A coordinate system with a machine zero point set as its origin is referred to as a machine coordiante system.

A machine coordinate system is set by performaing manual reference position return after power-on(See 1.5.4_book2). A machine coordiante system, once set, remains unchanged.

Format: G53 IP_ ;

When a position has been specified as a set of machine coordinates, the tool moves to that position by means of rapid traverse. G53, used for selecting the machine coordinate system, is a one–shot G code. Any commands based on the selected machine coordinate system are thus effective only in the block containing G53. When the tool is to be moved to a machine–specific position such as a tool change position, program the movement in a machine coordinate system based on G53.

When manual reference position return is performed after power-on, a machine coordinate

system is set so that the reference position is at the coordinate values of (α, β) set by P46,P47,P48 & P49 in Axis parameter .

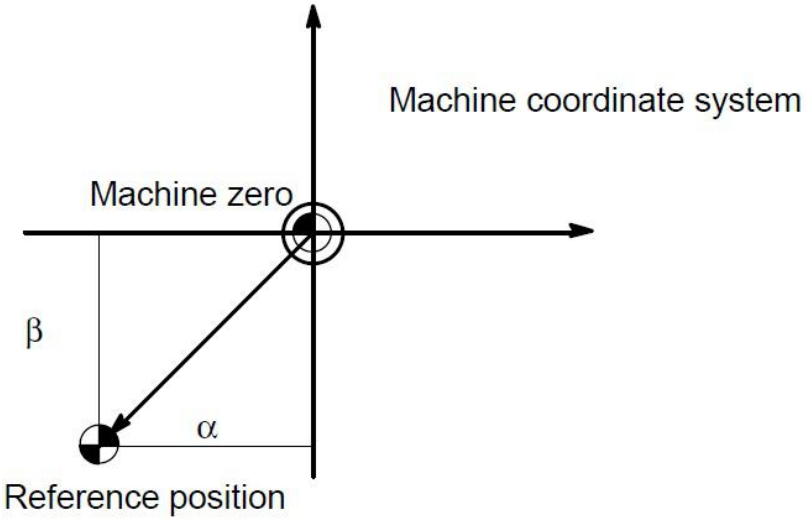

Fig3.10.2 Machine coordinate system

3.14.2 Workpiece Coordiante system(G54/G55/G56/G57/G58/G59)

A coordinate system used for machining a workpiece is referred to as a workpiece coordinate system. A workpiece coordinate system is to be set with the CNC beforehand **(setting a workpiece coordinate system)**.

A machining program sets a workpiece coordinate system **(selecting a workpiece coordinate system)**.

A set workpiece coordinate system can be changed by shifting its origin **(changing a workpiece coordinate system)**.

A workpiece coordinate system can be set using one of three methods:

(1)Method using G50

A workpiece coordinate system is set by specifying a value after G50 in the program.

(2) Automatic setting

A workpiece coordinate system is automatically set when manual reference position return is performed .

(3) Mothod of using G54 to G59

Make settings on the MDI panel to preset six workpiece coordinate systems. Then, use program commands G54 toG59 to select which workpiece coordinate system to use.

When an absolute command is used, a workpiece coordinate system must be established in any of the ways described above.

The user can choose from set workpiece coordinate systems as described below.

Setting a workpiece coordinate system by G50

Format G50 IP_

A workpiece coordinate system is shifted to set a new workpeice coordiante system so that a point on the tool, such as the tool tip, is at specified coordinates(IP_). Then, the amount of coordinate system shift is added to all the workpiece zero point offset values. This is means that if a coordinates system is set using G50 during tool length offset, a coordinate system in which the position before offset matches the position specified in G50 is set.

Tool compensation is cancelled temporarily with G50.

Warning: When a coordinate system is set with G50 after an external workpiece zero point offset value is set, the coordinate system is not affected by the external workpiece zero point offset value. When G50 X100Z80; is specified, for example, the coordiante system having its current tool reference position at X=100 & Z=80 is set.

Example:

Example1: Setting the coordinate system by the G92 X25.2 Z23.0; command

(The tool tip is the start point for the program)

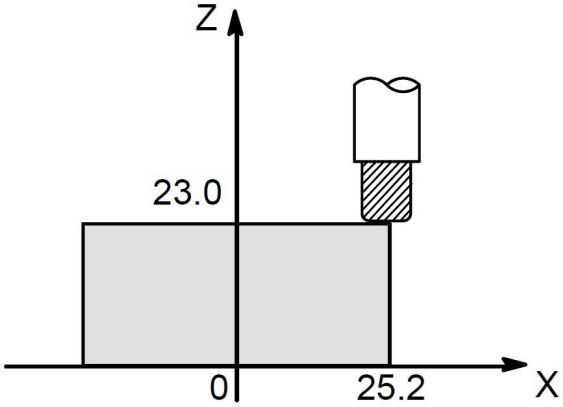

Fig3.10.3 Example1 with G50

Example2: Setting the coordinate system by the G50 X600.0 Z1200.0 ; command

(The base point on the tool holder is the start point for the program)

(If an absolute command is issued, the base point moves to the command position. In order to move the tool tip to the commanded position, the differerence from the tool tip to the base point is compensated by tool length offset.)

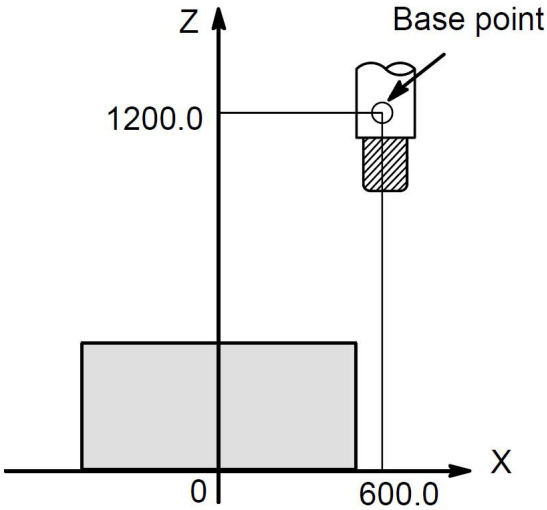

Fig3.10.4 Example2 with G50

Choosing from six workpiece coordinate systems set in the MDI: By specifying a G code from G54 to G59, one of the workpiece coordinate systems 1 to 6 can be selected.

G54 Workpiece coordinate system 1

G55 Workpiece coordinate system 2

G56 Workpiece coordinate system 3

G57 Workpiece coordinate system 4

G58 Workpiece coordinate system 5

G59 Workpiece coordinate system 6

Workpiece coordinate system 1 to 6 are established after reference position return after the power is turned on. When the power is turned on, G54 workpiece coordiante system is selected.

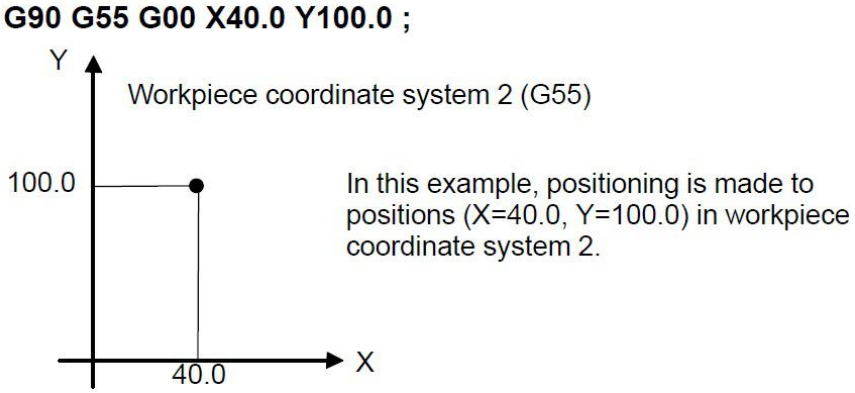

Fig3.10.5 Workpiece Coordiante system

Changing Workpiece Coordiante System: The six workpiece coordinate systems specified with G54 to G59 can be changed by changing an external workpiece zero point offset value or workpiece zero point offset value.

Three methods are available to change an external workpiece zero point offset value or workpiece zero point offset value.

(1) Inputting from the MDI panel

(2) Programming by G50

(3) Using the external data input function

An external workpiece origin offset can be changed by using a signal input to the CNC,also alter coordinate system in Coordinate parameter.

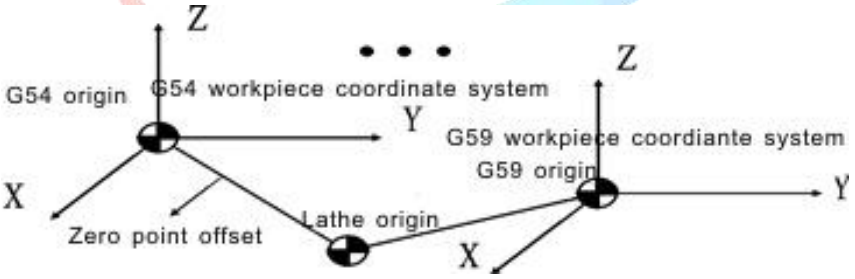

Fig3.10.6 Changing workpiece coordiante system

Example: G00 G54 X50 Y60 Z70

Move to X50 Y60 Z70 of G54 with speed of G00.

3.14.3 Local Coordinate System (G52)

When a program is created in a workpiece coordinate system, a child workpiece coordinate system may be set for easier programming. Such a child coordinate system is referred to as a local coordinate system.

Format: G52 IP_; Setting the local coordinate system

G52 IP 0 ; Canceling of the local coordinate system

IP_: Origin of the local coordinate system

By specifying G52IP_;, a local coordinate system can be set in all the workpiece coordinate systems (G54 to G59). The origin of each local coordinate system is set at the position specified by IP_ in the workpiece coordinate system.

Once a local coordinate system is established, the coordinates in the local coordinate system are used in an axis shift command. The local coordinate system can be changed by specifying the G52 command with the zero point of a new local coordinate system in the workpiece coordinate system.

To cancel the local coordinate system and specify the coordinate value in the workpiece coordinate system, match the zero point of the local coordinate system with that of the workpiece coordinate system.

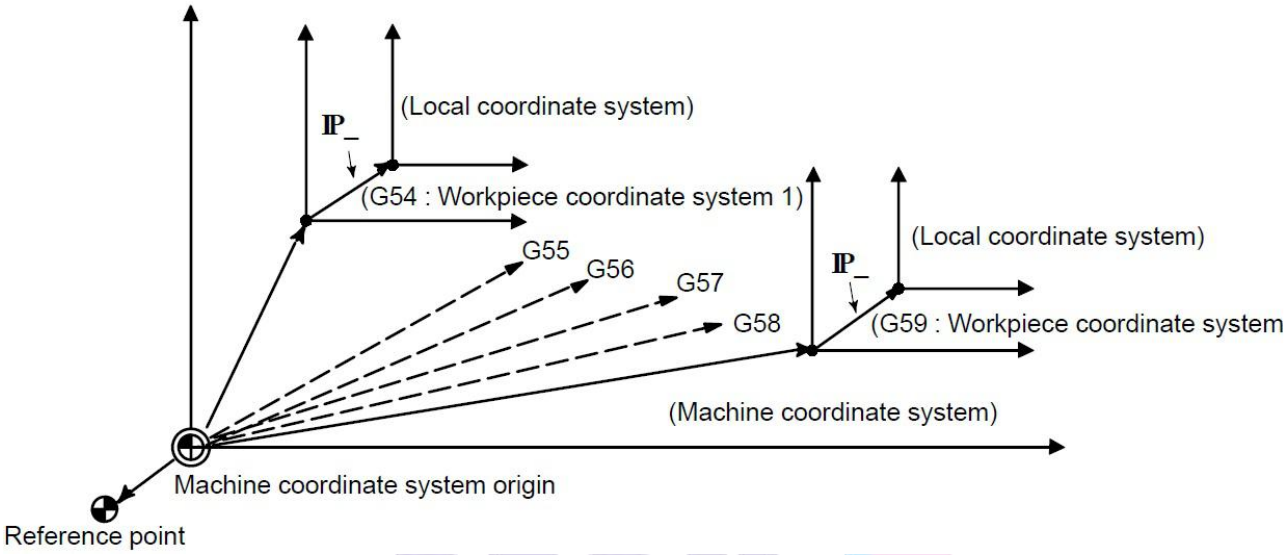

Fig3.10.7 Setting the Local Coordinate System

Note:1.The local coordinate system setting does not change the workpiece and machine coordinate systems.

2. When G50 is used to define a work coordinate system, if coordinates are not specified for all axes of a local coordinate system, the local coordinate system remains unchanged. If coordinates are specified for any axis of a local coordinate system, the local coordinate system is canceled.

3. G52 cancels the offset temporarily in tool nose radius compensation.

4. Command a move command immediately after the G52 block in the absolute mode.

Example:

G52 X100 Y60; set local coordiante system on G54;

If tool position X100,Y100 is commanded at local coordiante system when tool is positioned at (200,160) in G54 mode, Local coordinate system (X'-Y') shift by vector A is created

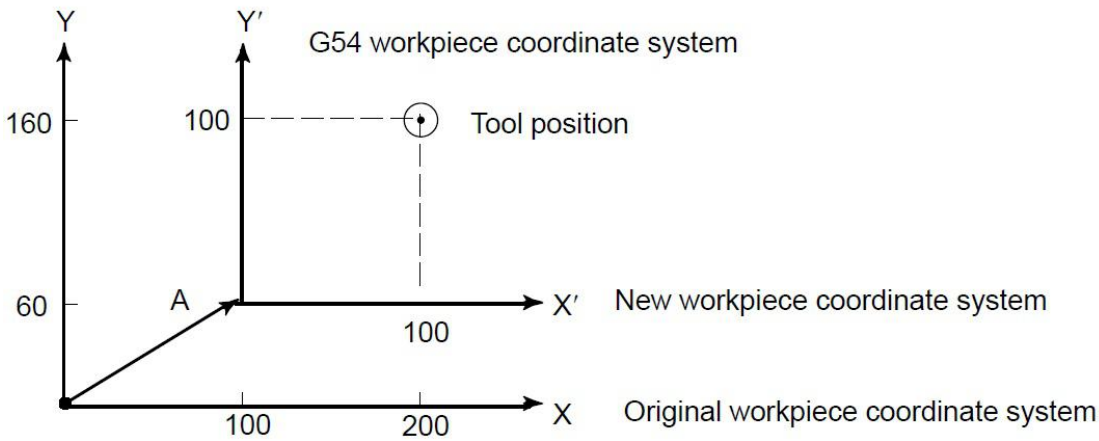

Fig3.10.6 Example of Local Coodinate System

3.15 Plane Selection(G17/G18/G19)

Select the planes for circular interpolation, cutter compensation, and drilling by G-code.

Format: G17 (Mode,Original) ;XY Plane selection
G18 (Mode) ;ZX Plane selection
G19 (Mode) ;YZ Plane selection

The following table lists G-codes and the planes selected by them.

G code	Selected Plane	Xp	Yp	Zp
G17	Xp Yp Plane	X-axis or an axis parallel to it	Y-axis or an axis parallel to it	Z-axis or an axis parallel to it
G18	Zp Xp Plane			
G19	Yp Zp plane			

Used to ensure circular interpolation plane.this instruction does not produce motion.

3.16 Absolute and Incremental Programming (G90/G91)

There are two ways to command travels of the tool: absolute command and incremental command.In the absolute command, coordinate value of the end position is programmed; in the incremental command, move distance of the position itself is programed. G90 and G91 are used to command absolute or incremental command respecitively.

Format: G90 (Mode,initial) ;Absolute command
G91 (Mode) ;Incremental command

Note:Rotating axis programming,calculation is with nearest of in absolute coordinate system, calculation is with programming in incremental coodinate system.

Example:

G90 X40.0 Y70.0 ; **Absolute command**

G91 X–60.0 Y40.0 ; **Incremental command**

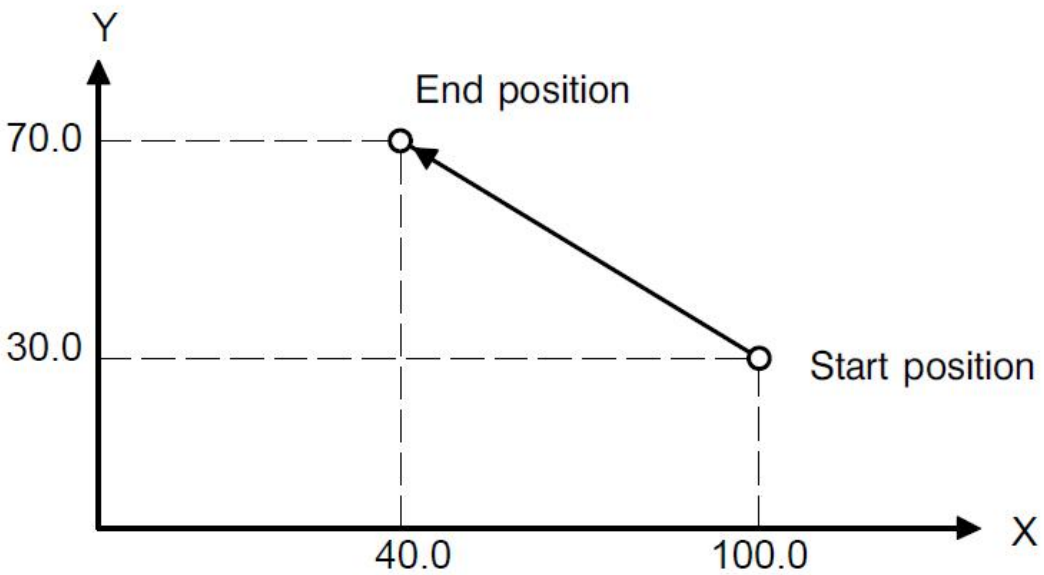

Fig3.11.1 Exmaple of Absolute/Incremental Programming

3.17 Pole coordinate instruction(G15/G16)

The end point coordinate value can be input in polar coordiante (Radius & Angle).

The plus direction of the angle is counterclockwise of the selected plane first axis + direction , and the minus direction is clockwise.

Both radius & angle can be commanded in either absolute or incremental command(G90,G91).

Format: G□□ G○○ G16; Starting the polar coordiante command(Polar Mode)

G◇◇ IP_; Polar coordinate command

...

G15 Cancel Pole coordinate command;

G16 ; Polar Coordinate command

G15 ; Polar coordinate command cancel

G□□ ; Plane selection of the polar coordiante command(G17,G18 or G19)

G○○; G90 specifies the zero point of the work coordinate system as the origin of the polar coordiante system, from which a radius is measured. G91 specifies the current position as the origin of the polar coordinate system,from which a radius is measured.

IP_ ; Specifying the addresses of axes constituting the plane selected for the polar coordinate system, and their values.

First axis: Radius of pole coordinate.

Second axis: Angle of pole coordinate.

Setting the zero point of workpiece coordinate system as origin of pole coordinate system: Sepcify the radius(the distance between the zero point and the point) to be programmed with an absolute command. The zero point of the work coordiante system is set as the origin of the polar coordinate system.When a local coordinate system(G52) is used, the origin of local coordinate system becomes the center of polar coordinate. As the follow shown:

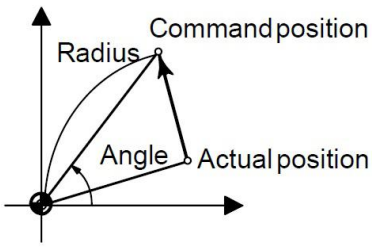

When the angle is specified with an absolute command

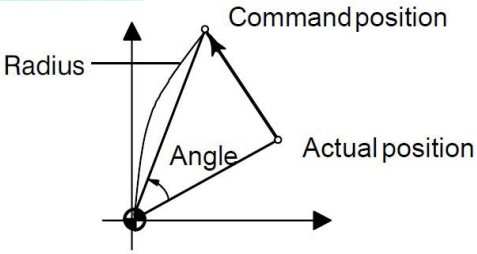

When the angle is specified with an incremental command

Setting the current position as the origin of polar coordinate system: Spcify the radius (the distance between the current positon and the point) to be programmed with an incremental command. The current position is set as the origin of the polar coordiante system.

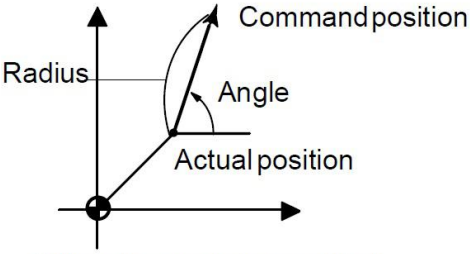

When the angle is specified with an absolute command

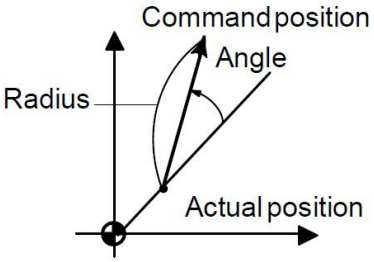

When the angle is specified with an incremental command

Example: Bolt hole circle

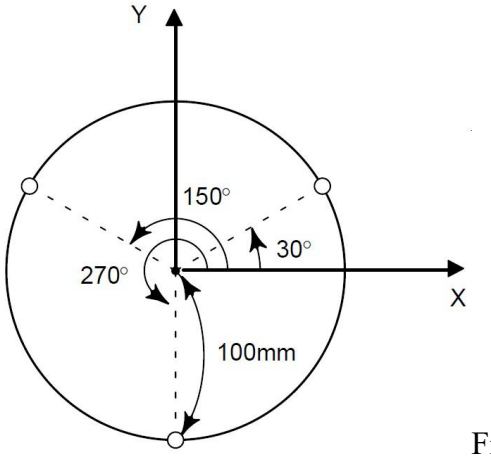

- The zero point of the work coordinate system is set as the origin of the polar coordiante system.

- The XY plane is selected.

Fig3.13.1 Example of Polar Coordiante

(a) Specifying angles and a radius with absolute commands.

N1 G17 G90 G16 X0 Y0;

Specifying the polar coordinate command and selecting the XYplane setting the zero point of the workpiece coordiante system as the origin of the polar coordiante system.

N2 G81 X100.0 Y30.0 Z-20.0 R-5.0 F200.0;

Specifying a distance of 100mm and an angle of 30 degrees

N3 Y150.0;

Specifying a distance of 100mm and an angle of 150 degrees

N4 Y270.0;

Specifying a distance of 100mm and an angle of 270 degrees

N5 G15 G80;

Canceling the polar coordiante command & drilling cycle.

(b) Specifying angles with incremental commands and a radius with absolute commands

N1 G17 G90 G16;

Specifying the polar coordinate command and selecting the XY plane. Setting the zero point of the workpiece coordiante system as the origin of the polar coordiante system.

N2 G81 X100.0 Y30.0 Z-20.0 R-5.0 F200.0

Specifying a distance of 100mm and an angle of 30 degrees

N3 G91 Y120.0;

Specifying a distance of 100mm and an angle of +120 degrees

N4 Y120.0;

Specifying a distance of 100mm and an angle of +120 degrees

N5 G15 G80;

Canceling the polar coordinate command.

(c) Specifying a radius in the polar coordiante mode

In the polar coordiante mode, specify a radius for circular interpolation or helical cutting (G02, G03) with R.

Neither optional-angle chamfering nor corner rounding can be commanded in polar coordiante mode.

3.18 Inch/Metric Conversion (G20/G21)

Either inch or metric input can be selected by G code.

Format: G20 ; Inch input
G21 ; mm input

This G code must be specified in an independent block before setting the coordinate system at the beginning of the program. After the G code for inch/metric conversion is specified, the unit of input data is switched to the least inch or metric input increment of increment system IS－B or IS－C. The unit of data input for degrees remains unchanged.

The unit systems for the following values are changed after inch/metric conversion:

- **Feedrate commanded by F code**
- **Positional command**
- **Work zero point offset value**
- **Tool compensation value**
- **Unit of scale for manual pulse generator**
- **Movement distance in incremental feed**
- **Some parameters**

When the power is turned on, the G code is the same as that held before the power was turned off.

Note: 1. G20 and G21 must not be switched during a program.

2. Movement from the intermediate point is the same as that for manual reference position return.The direction in which the tool moves from the intermediate point is the same as the reference position return direction.

3. When the least input increment and the least command increment systems are different, the maximum error is half of the least command increment. This error is not accumulated.

4. The inch and metric input can also be switched using setting of data setting.

3.19 Feed Mode

Feedrate of linear interpolation(G01),circular interpolation(G02/G03),etc. are commanded with numbers after the F code.In cutting feed, the next block is executed so that the feedrate change from the previous block is minimized.

Format: Feed per minute: G94 ; G code (group 5) for feed per minute
F_ ; Feedrate command (mm/min or inch/min)
Feed per revolution G95 ; G code (group 5) for feed per revolution
F_ ; Feedrate command (mm/rev or inch/rev)

Tangential speed constant control: Cutting feed is controlled so that the tangential feedrate is always set at a specified feedrate.

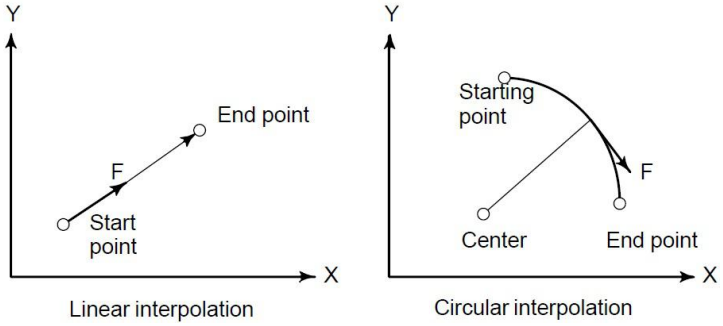

Fig3.15.1 Tangential feedrate

Feed per minute (G94): After specifying G94(in the feed per minute mode), the amount of feed of the tool per minute is to be directly specified by setting a number after F. G94 is a modal code. Once a G94 is specified, it is valid until G95(feed per revolution) is specified. At power-on, the feed per minute mode is set.

An override from 0% to 150% can be applied to feed per minute with the switch on the machine operator's panel. For detailed information, see the appropriate manual of the machine tool builder.

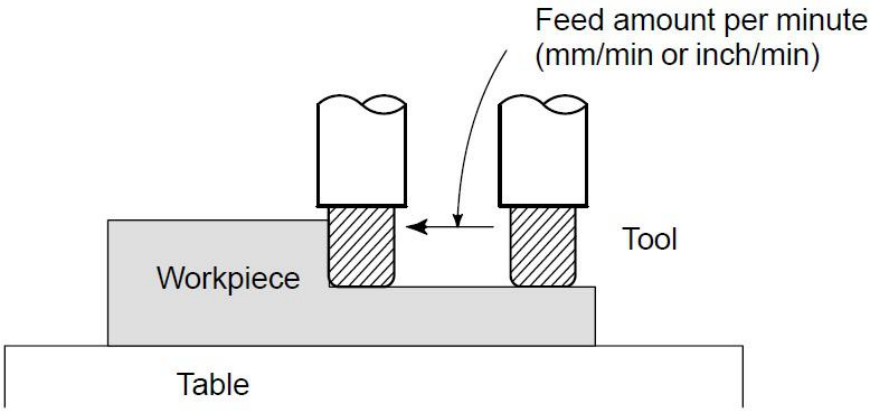

Fig3.15.2 Feed per minute

Warning: No override can be used for some commands such as for threading.

Feed per revolution(G95): After specifying G95(in the feed per revolution mode), the amount of feed of the tool per spindle revolution is to be directly specified by setting a number after F. G95 is a modal code. Once a G95 is specified, it is valid until G94 (feed per minute) is specified.

An override from 0% to 150% can be applied to feed per minute with the switch on the machine operator's panel. For detailed information, see the appropriate manual of the machine tool builder.

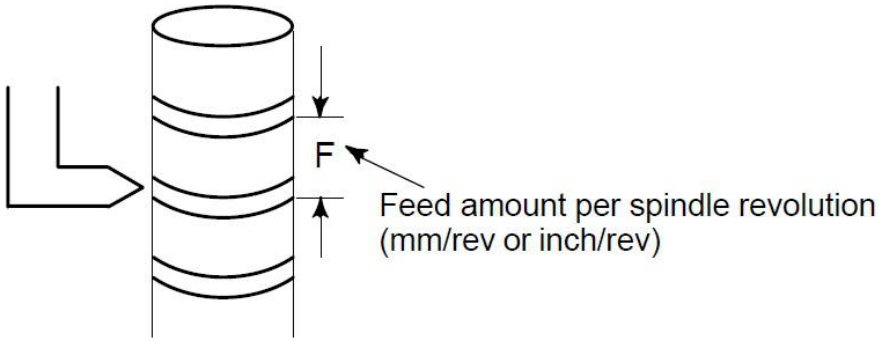

Fig3.15.3 Feed per revolution

Note: When the speed of spindle is low, feedrate fluctuation may occur. The slower the spindle rotates, the more frequently feedrate fluctuation occurs.

3.20 Processing Mode (G60/G64)

According to process requirements, user can specify the connection way between program block by G60/G64.

Format: **G60 ; Acturate Positioning Processing**
G64 ; Continous Path Processing

Both G60 and G64 are modal instructions.

3.21 Scaling (G36/G37)

A programed figure can be magnified or reduced.(scaling)

The dimensions specified with X_, Y_, and Z_ can each be scaled up or down with the same or different rates of magnification. The magnification rate can be specified in the program.

Unless specified in the program, the magnification rate specified in the parameter is applied.

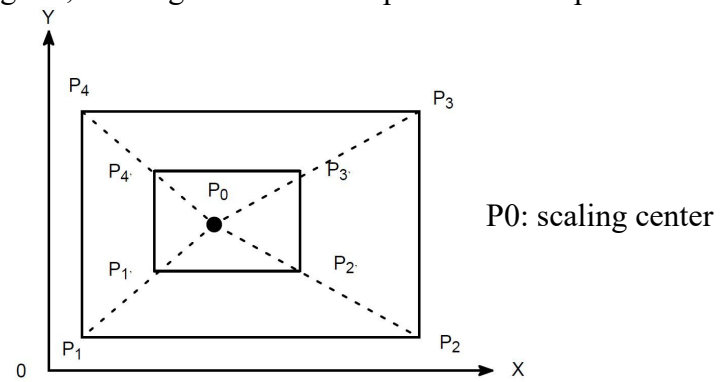

Fig3.15.1 Scaling($P_1P_2P_3P_4$ -> $P_1'P_2'P_3'P_4'$)

Format: G36 X_Y_Z_R_ ;Scaling start

... } Scaling is effective(scaling mode)

...

G37 ;Cancel

R_: scaling magnification.

P1` P2` P3` P4` magnify to P1 P2 P3 P4,R=P0P4`/P0P4. When P1 P2 P3 P4 reduce to P1` P2` P3` P4`, R=P0P4/P0P4`. So: R<1 when magnifying, R>1 when reducing,R=1 can be default.

Note: 1.Specify G36 in a separate block. After the figure is enlarged or reduced, specify G37 to cancel the scaling mode.

2.If someone axis didn't spcify, this axis won't scaling.

3.the scaling is invalid for value of tool compensation & tool offset.

4.In scaling mode, G27, G28, G61& G30, or commands related to the coordiante system(G52-G59) must not be specified. When any of these G codes is necessary, specify it after canceling scaling mode.

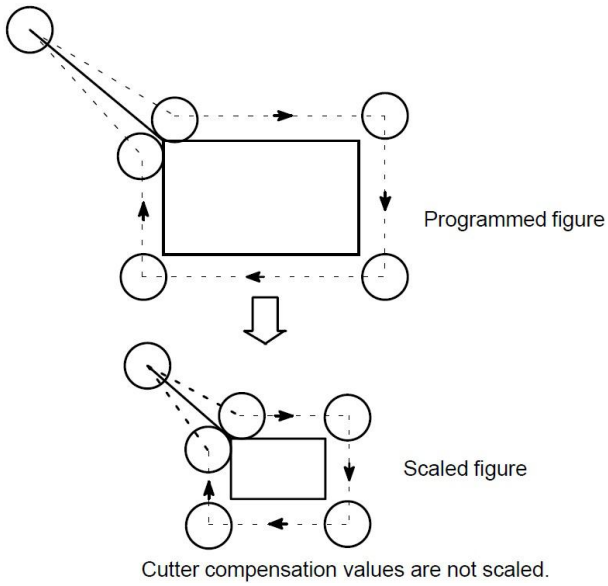

Fig3.15.2 Scaling during tool compensation

3.22 Programmable mirror image (G11/G12)

A mirror image of a programmed comamnd can be produced with respect to a programmed axis of symmetry.(See Fig3.16.1)

Format: G11 X_ Y_ (Z_ X_) (Y_ Z_) (mode) ;according to XYZ symmetry axis
G12 (mode,original) ;Cancel Mirror.

Programmablel mirror image finish processing of symmetric point in this axis by change the feeding direction of axis,which is specified by current interpolation plane G17(X_Y_) /G18(Z_X_) /G19(Y_Z_). The value behind of X_Y_Z_ is the coordiante value of current coodinate sytem.

Example of mirror image program

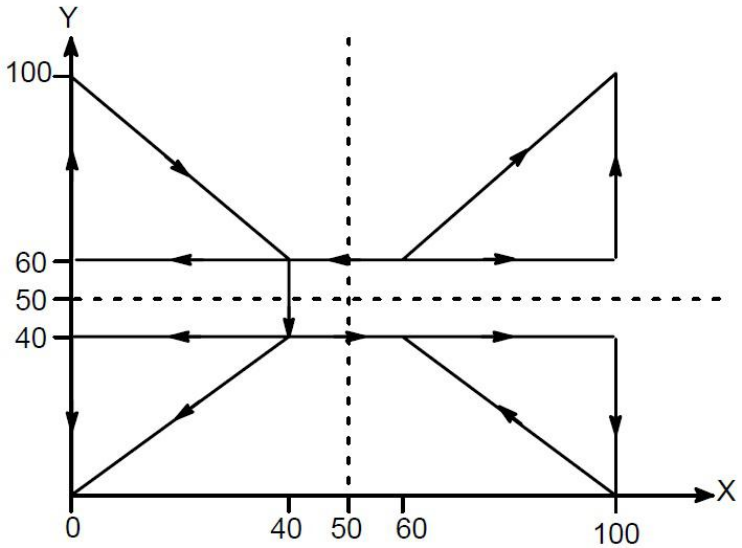

Fig3.16.1 Example of a mirror image program

Sub program: KG11

```
N10 G00 G90 X60.0 Y60.0 ;
N20 G01 X100.0 F100 ;
N30 G01 Y100.0 ;
N40 G01 X60.0 Y60.0 ;
N50 M99 ;
```

Main program

```
N10 G00 G90;
N20 M98 PKG11;
N30 G11 X50.0
N40 M98 PKG11;
N50 G11 X50.0 Y50.0
N60 M98 PKG11;
N70 G11 Y50.0
N80 M98 P%9000;
N90 G12;
N100 M12;
```

Note: before specifying the G code for reference position return(G26,G28,G61,G30) or coordiante system setting(G52-G59),cancel the mirror image mode.

3.23 Rotate Coordinate Instruction (G68/G69)

A programming shape can be rotated, by using this function it becomes possible, for example, to modify a program using a rotating command when a workpiece has been plaxed with some angle rotated from the programmed position on the machine. Further, when there is a patter comprising some identical shapes in the positoins rotated from a shape, the time required for programming and the length of the program can be reduced by preparing a subprogram of the shape and calling it after rotation. In short: By designating a rotation angle with G68 in the program, actual machining will be performed on the rotated coordinate.

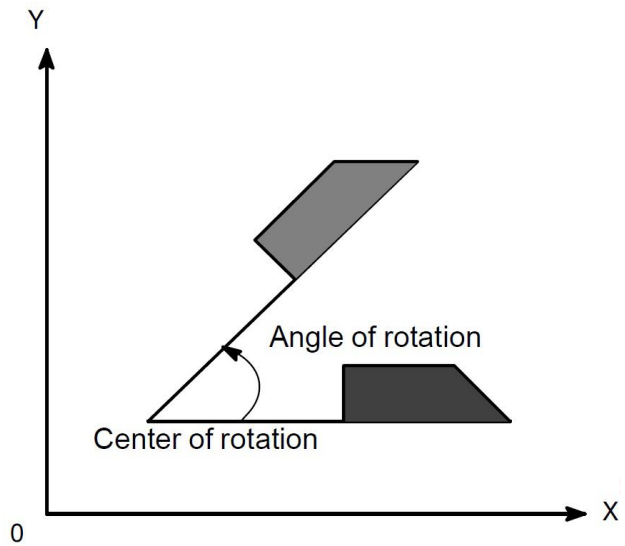

Fig3.17.1 coordinate system rotation

User can specify the Center-point (origin) and Angle-of-rotation, and whole the pattern of operation will be executed there.Anyway, if the shape of workpiece is comprised of many same graphics, the graphics unit can be compiled to subprogram, then the subprogram is on tap for rotation instruction of main program.

Format
{G17, G18, G19} G68 α_β_ R_ ; **Start rotation of a coordinate system.** **...** **...** **Coordinate system rotation mode (The coordiante system is rotated)** **...** **G69 ;** **Coordinate system rotation cancel command**
Meaning of command
G17(G18 or G19) : Select the plane in which contains the figure to be rotated. **α_β_ : Absolute command for two of the X_,Y_ and Z_ axes that correspond to the current plane selected by command(G17/G18/G19). The command specifies the coordiantes of the center of rotation for the values specified subsequent to G68.** **R_ : Rotating angle, with a positive value indicates counter clockwise roation. With negative value indicates clockwise roation.** **Least input increment: 0.001 deg; Valid data range: -360.000 ~ 360.000 .**

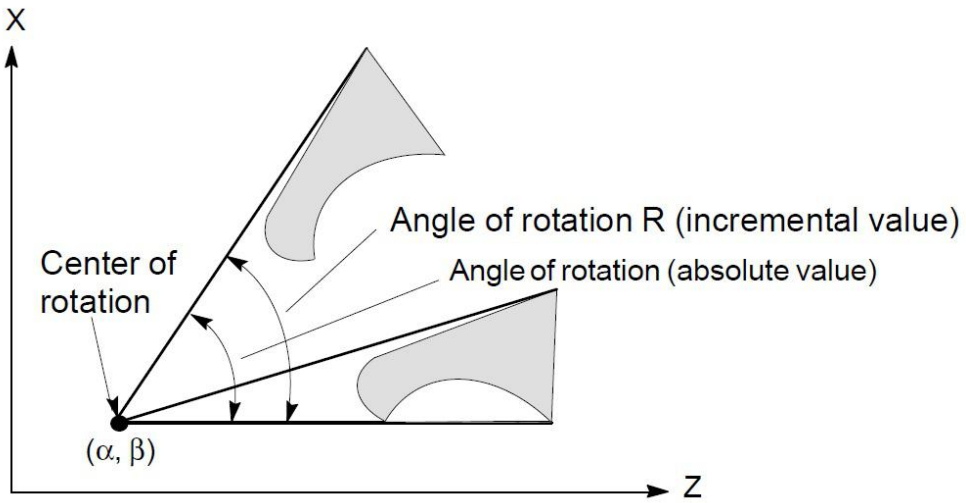

Fig3.17.2 coordinate system rotation

Note: When a decimal fraction is used to specify angular displacement (R_), the 1st digit corresponds to degree units.

G code for selecting a plane: G17/G18/G19: The G code for selecting a plane(G17 G18 or G19) can be specified before the block containing the G code for coordinate system rotation(G68). G17, G18 or G19 must not be designated in the mode of coordinate system rotation.

Incremental command in coordinate system rotation mode: The center of rotation for an incremental command programmed after G68 but before an absolute command is the tool position when G68 was programmed.(See Fig3.17.3).

Center of rotation: When α_β_ is not programmed, the tool position when G68 was programmed is assumed as the center of rotation.

Coordinate system rotation cancel command: The G code used to cancel coordinate system rotation (G69) may be specified in a block in which another command is specified.

Tool compensation: Cutter compensation, tool length compensation, tool offset, and other compensation operations are executed after the coordiante system is rotated.

Limitations:

Commands related to reference position return and the coordinate system: In coordinate system rotation mode, G codes related to reference position return (G28,G26,G61,G30, etc.) and these for changing the coordinate system(G52-G59, etc.)must not be specified. If any of these G codes is necessary, specify it only after canceling coordinate system rotation mode.

Incremental command: The first move command after the coordinate system rotation cancel command (G69) must be specified with absolute values. If an incremental move command is specified, correct movement will not be performed.

Example1: Absolute/Incremental Position commands:

```
N1 G01 X-500 Y-500 F2000 G17;
N2 G68 X700 Y300 R60;
N3 G90 G01 X0 Y0 F2000;
   (G91 X500.0 Y500.0)
N4 G91 X1000
N5 G02 Y1000 R1000
N6 G03 X-1000 I-500 J-500;
```

N7 G01 Y-1000
N8 G69
N9 G90 X-500 Y-500
N10 M02;

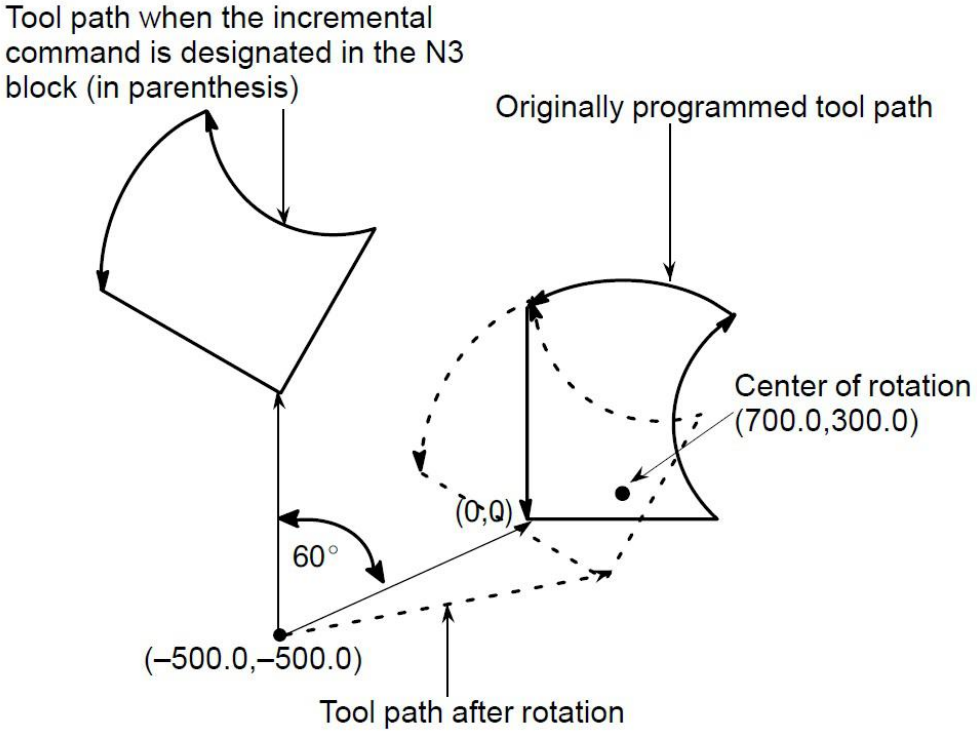

Fig3.17.3 Absolute/Incremental command during coordinate system Rotation

Example2: Cutter compensation C and coordinate rotation

It is possible to specify G68 and G69 in cutter compensation C mode. The rotation plane must coincide with the plane of cutter compensation C.

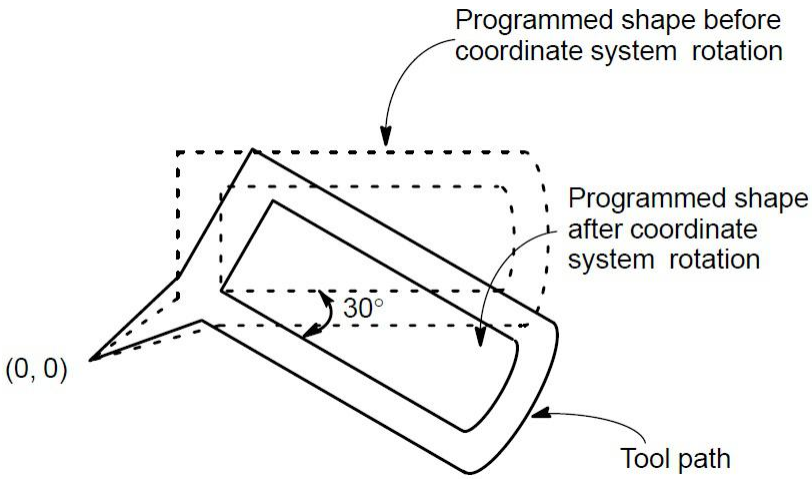


```
N1 G01 X0 Y0 G69 ;
N2 G42 G90 X1000 Y1000 F1000 D01;
N3 G66 R-30000;
N4 G91 X2000 ;
N5 G03 Y1000 R1000 J500
N6 G01 X-2000;
N7 Y-1000 ;
N8 G69 ;
N9 G90 X0 Y0 ;
N10 G42 ;
N11 M30 ;
```

Fig3.17.4 Cutter compensation C and Coordinate system rotation

3.24 Tool Length Offset (G43/G44/G49)

This function can be used for setting the difference between tool length assumed during programming and the actual tool length of the tool used into the offset memory. It is possible to compensate the difference without chaning the program.

Specify the direction of offset with G43 or G44. Select a tool length offset value from the offset memory by entering the cooresponding address and number(H code).

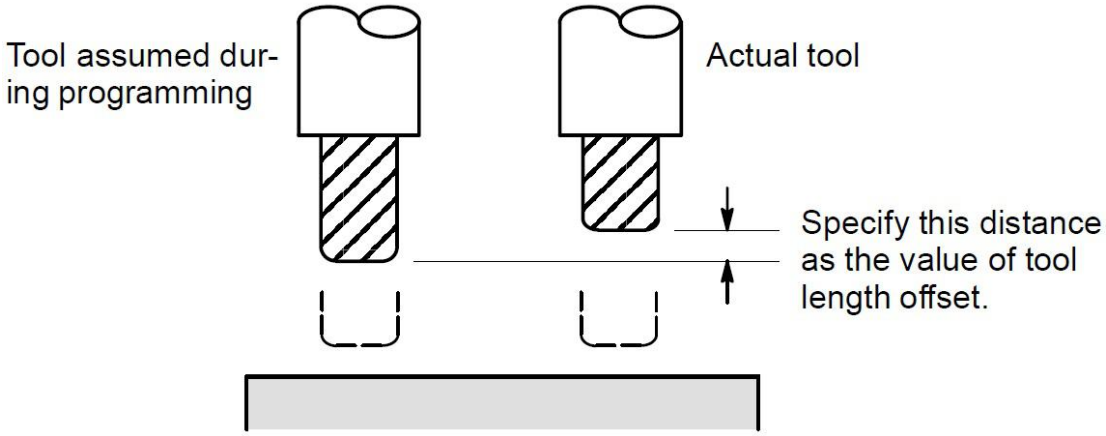

Fig3.18.1 Tool Length Offset

The following two methods of tool length offset can be used, depending on the axis along which tool length offset can be made.

- ✓ **Tool length offset A**: Compensates for the difference in tool length along the Z-axis.
- ✓ **Tool length offset B**: Compensates for the difference in tool length anlong the X-axis, Y-axis , or Z-axis.

Tool length offset A	G43 H_ G44 H_	Offset along the Z-axis
Tool length offset B	G17 G43 Z_ H_ ; G17 G44 Z_ H_ ; G18 G43 Y_ H_ ; G18 G44 Y_ H_ ; G19 G43 X_ H_ ; G19 G44 X_ H_ ;	G43: Positive Offset G44: Negative Offset G17: XY Plane selection, offset on Z-axis G18: ZX Plane selection, offset on Y-axis G19: YZ Plane selection, offset on X-axis
Tool length offset cancel	G49; or H0 ;	Cancel Legnth Offset

Selection of tool length offset: Select tool length offset A, B, or C, by setting P47 on Speed parameter.When value of P47 +0,default set, tool length offset A; When +1, tool length offset B;

At tool length offset B, length offset can be shift to another axis when the axes are specified in two or more blocks.

The tool length offset value assigned to the number(offset number) specified in the H code is selected from offset memory and added to or subracted from the moving command in the program.

When G43 is spcified, the tool length offset value(store in offset memory) specified with the H code is added to the coordinates of the end position specified by a command in the program. When G44 is specified, the same value is subtracted from the coordiante of the end position. The resulting coordinates indicate the end position after compensation,regardless of whether the absolute or incremental mode is selected.

G43 and G44 are modal G codes.They are valid until another G code belonging to the same group is used.

Warning: When the tool length offset value is changed due to a change of offset number, the offset value changes to the new tool lenght offset value, the new tool length offset value is not added to the old tool length offset value.

To cancel tool length offset, specify G49 or H0. After G49 or H0 is specified,the system immediately cancels the offset mode.

Note: The tool length offset value corresponding to offset No.0, that is, H0 always means 0.It is impossible to set any other tool length offset value to H0.

Example1: H1: tool length offset value is 20.0 (Tool Length Offset A)
H2: tool length offset value is 30.0
G90 G43 Z100.0 H1; Z will move to 120.0
G90 G43 Z100.0 H2; Z will move to 130.0

Example2: Offset in X and Y axes.(Tool Length Offset B)
G19 G43 H_ ; Offset in X-axis
G18 G43 H_; Offset in Y-axis

Example3: H1=-4.0(Tool length offset value)

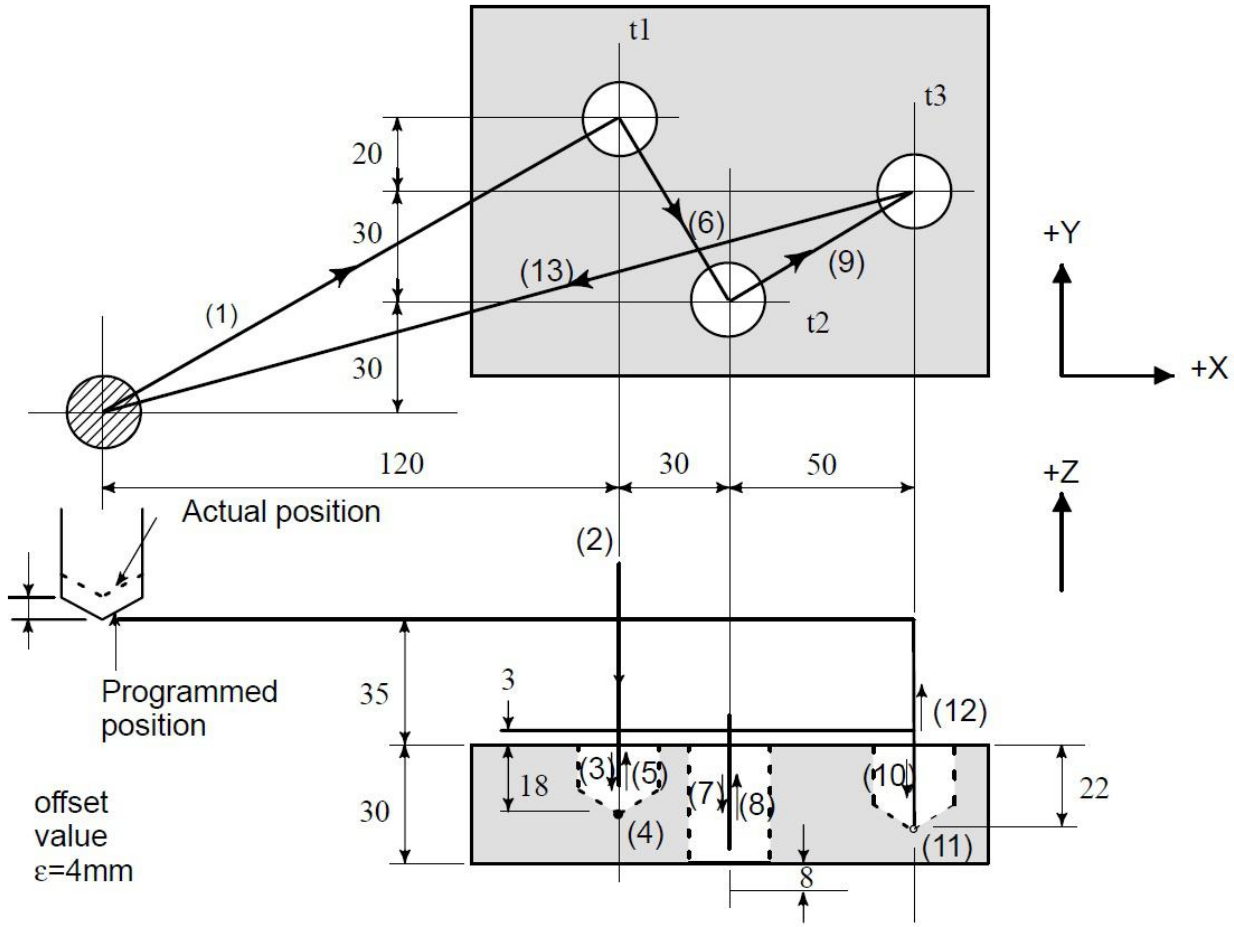

N1 G91 G00 X120.0 Y80.0;	N5 G0 Z21.0 ;	N9 X50.0 Y30.0 ;	N13 X-200.0 Y-60.0 ;
N2 G43 Z-32.0 H1;	N6 X30.0 Y-50.0 ;	N10 G01 Z-25.0 ;	N14 M2 ;
N3 G01 Z-21.0 F1000 ;	N7 G01 Z-41.0 ;	N11 G04 P2000 ;	
N4 G04 P2000 ;	N8 G00 Z41.0 ;	N12 G00 Z57.0 H0 ;	

3.25 Tool Offset(45/G46/G47/G48)

The programmed travel distance of the tool can be increased or decreased by a specified tool offset value.The tool offset function can also be applied to an additional axis.

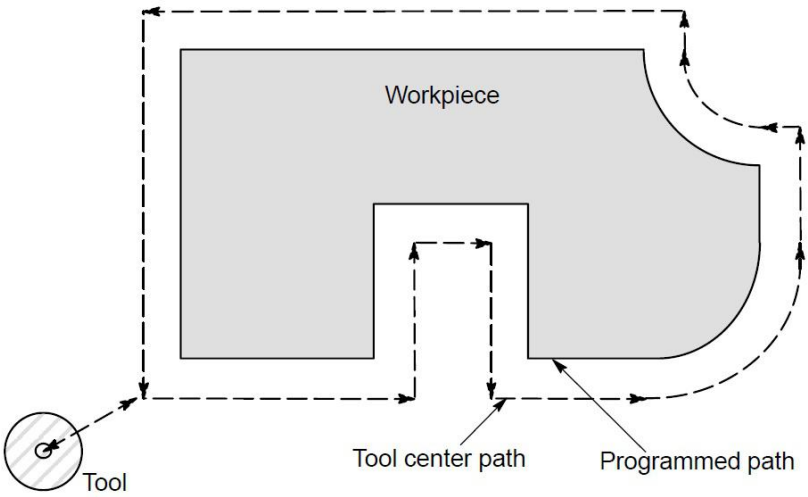

Fig3.19.1 Tool offset

Format: **G45 IP_ D_ ; Increase the travel distance by the tool offset value**
G46 IP_ D_ ; Decrease the travel distance by the tool offset value
G47 IP_ D_ ; Increase the travel distance by teice tool offset value
G48 IP_ D_ ; Decrease the travel distance by the tool offset value

G45-G48: One-shot G code for increaseing or decreasing the travel distance.

IP: Command for moving the tool

D: Code for specifying the tool offset value

As shown in Table3.19.2, the travel distance of the tool is increased or decreased by the specified tool offset value.

Table3.19.2 Increase and decrease of the tool travel distance

G code	When a positive tool offset value is specified	When a negative tool offset value is sepcified
G45	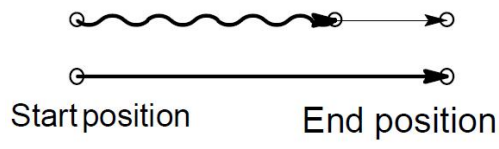	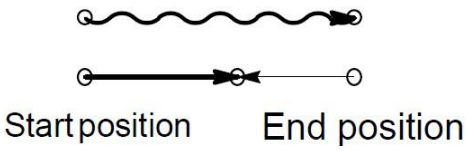
G46	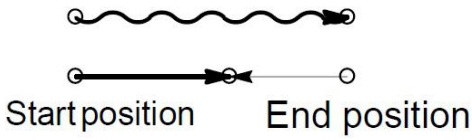	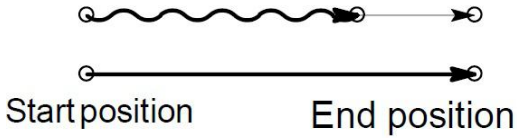
G47	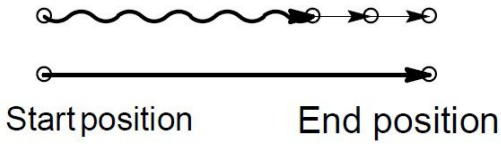	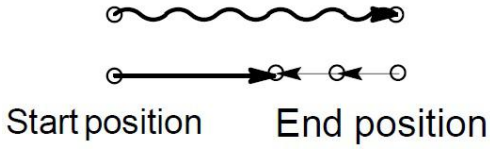
G48	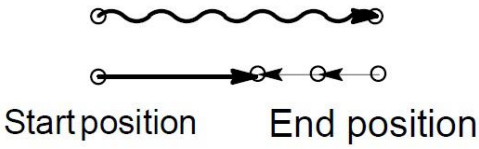	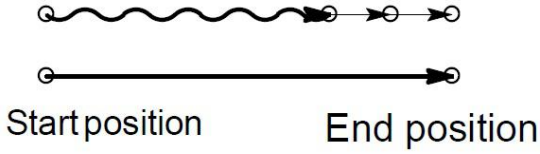

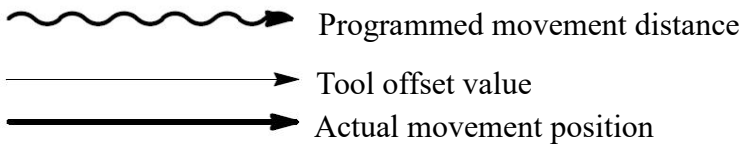

In the absolute mode, the travel distance is increased or decreased as the tool is moved from the end position of the previous block to the position specified by the block containing G45 to G48.

If a move command with a travel distance of zero is spcified in the incremental command (G91) mode, the tool is moved by the distance corresponding to the specified tool offset value.

If a move command with a travel distance of zero is specified in the absolute command (G90) mode, the tool is not moved.

Once selected by D code, the tool offset value remains unchanged until another tool offset value is selected. D0 always indicates a tool offset value of zero.

Warning: 1. When G45-G48 is specified to n axes (n=1-4) simultaneously in a motion block, offset is applied to all n axes. When the cutter is offset only for cutter radius or diameter in taper cutting, overcutting or undercutting occurs.Therefore, use cutter compensation (G40/G41/G42) shown in charpter 3.26.

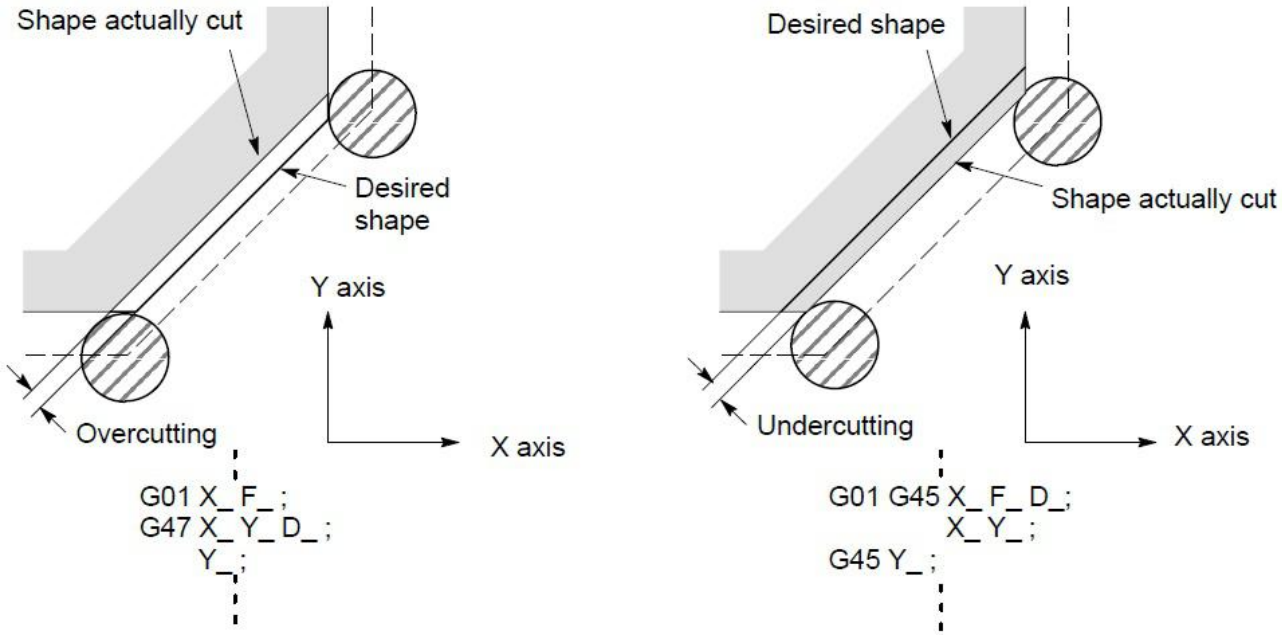

Fig3.19.3 Tool offset for overcutting & undercutting

2. G45-G48 (tool offset) must not be used in the G41 or G42 (cutter compensation) mode.

Note: 1.When the specified direction is reversed by decrease as shown in the figure below,the tool moves in the opposite direction.

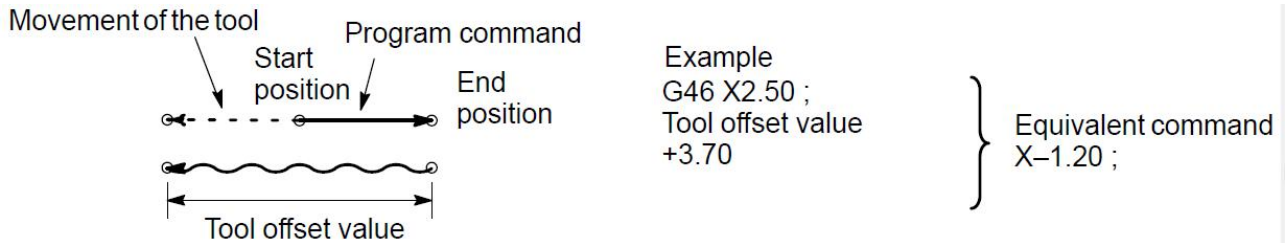

2.Tool offset can be applied to circular interpolation(G02,G03) with the G45 to G48 commands only for 1/4 and 3/4 circles using addresses I, J and K by the parameter setting, providing that the coordinate rotation be not specified at the same time. This function is provided for compatibility with the conventional CNC tape

without any cutter compensation. The function should not be used when a new CNC program is prepared.

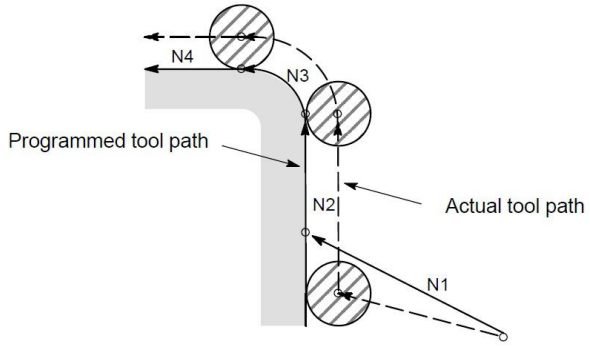

Program
N1 G46 G00 X_ Y_
N2 G45 G01 Y_ F_
N3 G45 G03 X_ Y_ I_ ;
N4 G01 X_

Fig3.19.4 Tool offset for circular interpolati

3.G45-G48 are ignored in canned cycle mode. Perform tool offset by specifying G45 to G48 before entering canned cycle mode and cancel the offset after releasing the canned cycle mode.

Example: Program using tool offset

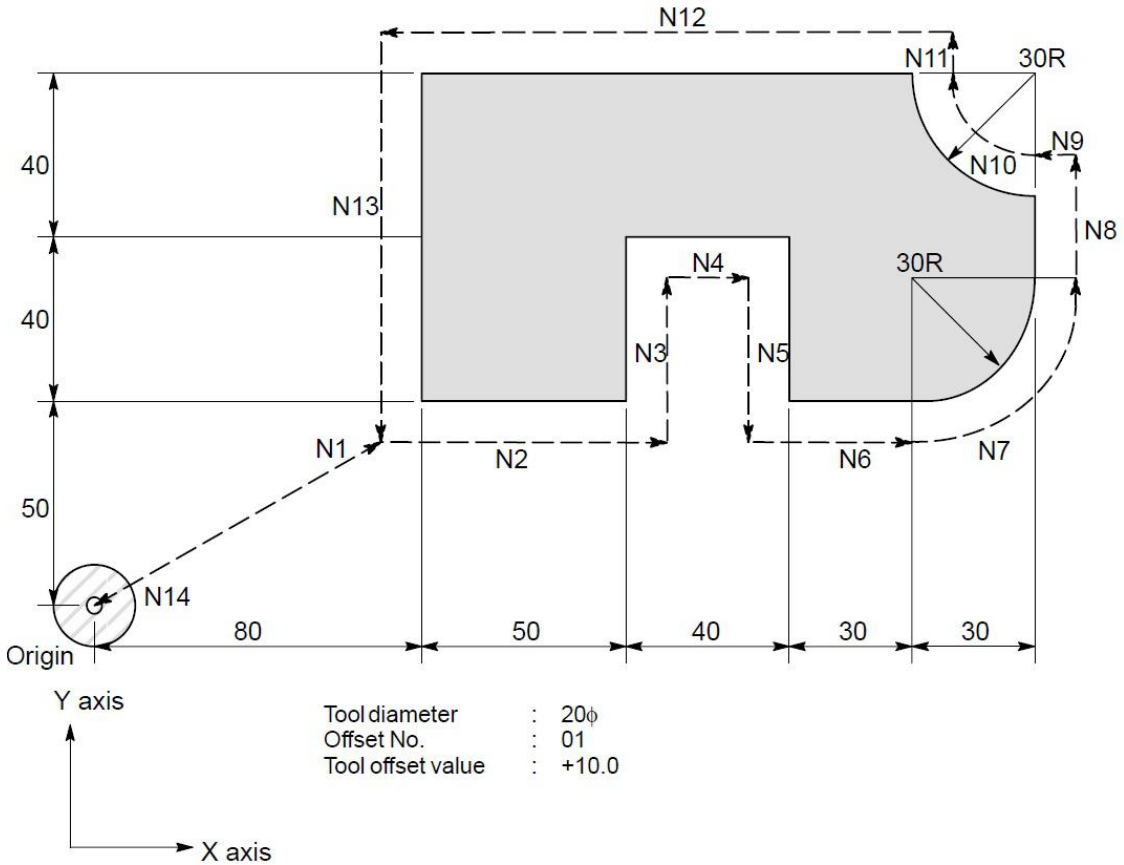

Program		
N1 G91 G46 G00 X80.0 Y50.0 D01	N2 G47 G01 X50.0 F120.0	N3 Y40.0
N4 G48 X40.0	N5 Y-40.0;	N6 G45 X30.0
N7 G45 G03 X30.0 Y30.0 J30.0	N8 G45 G01 Y20.0	N9 G46 X0
N10 G46 G02 X-30.0 Y30.0 J30.0	N11 G45 G01 Y0 ;	N12 G47 X-120.0
N13 G47 Y-80.0	N14 G46 G00 X-80.0 Y-50.0	

N9: Decrease toward the positive direction for movement amount “0”. The tool moves in the -X direction by the offset value. N11:Decrease toward the positive direction for movement amount “0”. The tool moves in the +Y direction by the offset value

3.26 Tool Radius Compensation C (G40/G41/G42)

When the tool is moved, the tool path can be shifted by radius of the tool.

To make an offset as large as the radius of the tool, CNC firstly establish offset vector with a length equal to the radius of the tool(start-up). The offset vector is perpendicular to tool path. The tail of vecotor is on the workpiece side and the head position to the center of the tool.

If a linear interpolation or circular interpolation command is specified after start-up, the tool path can be shifted by the length of the offset vector during machining.

To return the tool to the start position at end of machining, cancel the tool compensation mode.

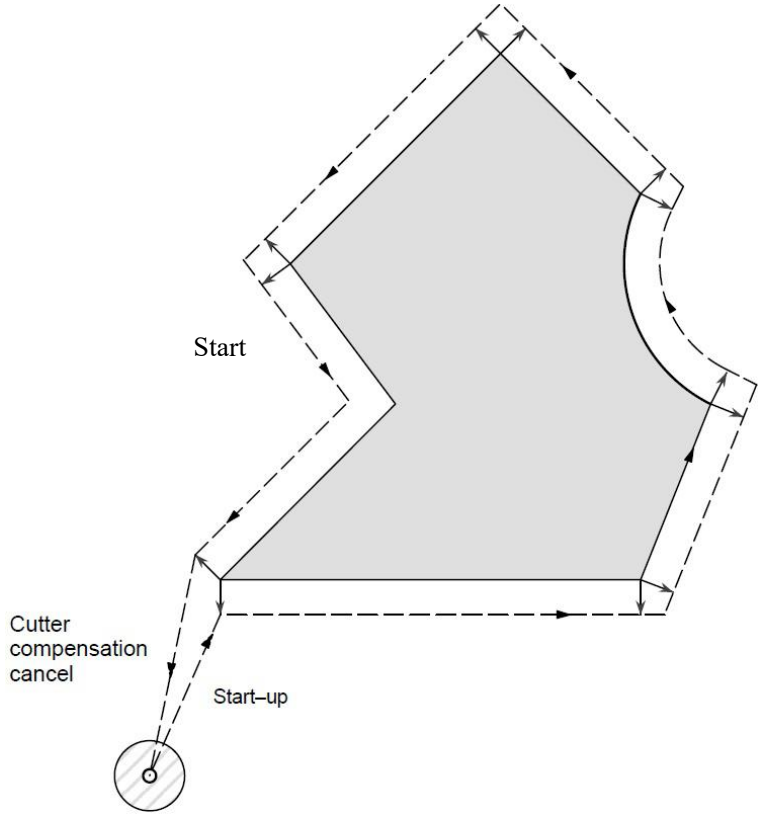

Fig3.20.1 Outline of tool compensation C

Format: G41 IP_ D_ ; Tool compensation left
G42 IP_ D_ ; Tool compensation right
G40 ; Cancel compensation.

IP_ : command for axis movement

D_ : code for specifying as the cutter compensation value.(D1-D99)

At the beginning when power is applied the control is in the cancel mode. In the cancel mode, the vector is always 0, and the tool center path coincides with the programmed path.

Start Up: When a tool compensation command(G41 or G42, nonzero dimension words in the offset plane, and D code other than D0) is specified in the offset cancel mode, the CNC enters the offset mode. Moving the tool with this command is called start-up.

Specify positioning(G00) or linear interpolation (G01) for start-up. If circular interpolation (G02, G03) is specified, cnc system will hint alarm.

When processing the start-up block and subsequent blocks,the CNC prereads two blocks.

Offset mode: In the offset mode, compensation is accomplished by positioning (G00), linear

interpolation (G01), or circular interpolation (G02, G03). If two or more blocks that do not move the tool (miscellaneous function, dwell, etc.) are processed in the offset mode, the tool will make either an excessive or insufficient cut. If the offset plane is switched in the offset mode, cnc system will alarm and the tool is stopped.

Offset mode cancel: In the offset mode, when a block which satisfies any one of the following conditions is executed, the CNC enters the offset cancel mode, and the action of this block is called the offset cancel.

1. **G40 has been commanded.**
2. **0 has been commanded as the offset number for tool compensation.**

When performing offset cancel, circular arc commands (G02 and G03) are not avaiable. If a circular arc is commanded, cnc system will alarm & stops tool.

In the offset cancel, the control executes the instructions in that block and the block in the cutter compensation buffer. In the meantime, in the case of a single block mode, after reading one block, the control executes it and stops. By pushing the cycle start button once more, one block is executed without reading the next block. Then the control is in the cancel mode, and nomrally, the block to be executed next will be stored in the buffer register and the next block is not read into the buffer for tool compensation.

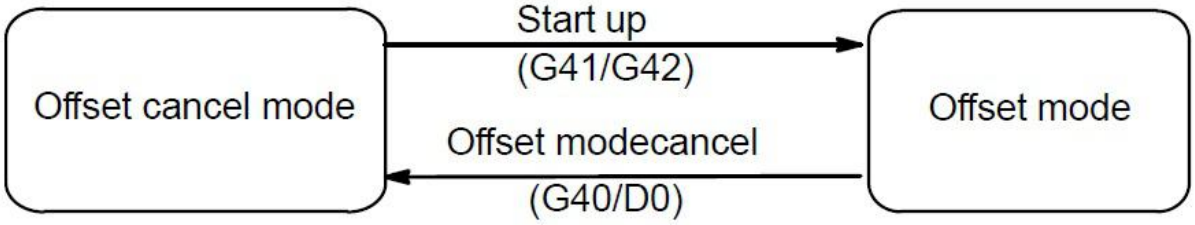

Fig3.20.2 Changing the offset mode

In general, the cutter compensation value shall be changed in the cancel mode, when changing tools. If the tool compensation value is changed in offset mode, the vector at the end point of the block is calculated for the new cutter compensation value.

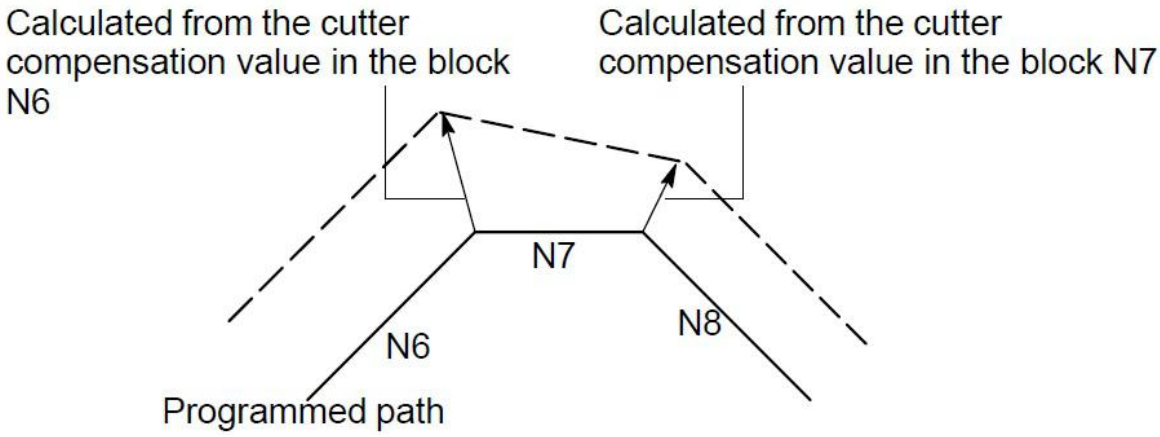

Fig3.20.3 Changing the cutter compensation value

If the offset amount is negative(-), distribution is made for a figure in which G41's and G42's are all replaced with each other on the program. Consequently, if the tool center is passing around the outside of the workpiece, it will pass around the inside,and vice versa.

The figure below shows one example. Generally, the offset amount is programmed to be positive(+) . When a tool path is programmed as in (1),, if the offset amount is made negative (-),

the tool center moves as in (2), and vice versa. Consequently, the same tape permits cutting both male and female shapes, and any gap between them can be adjusted by the selection of the offset amount. Applicable if start-up and cancel is A type.

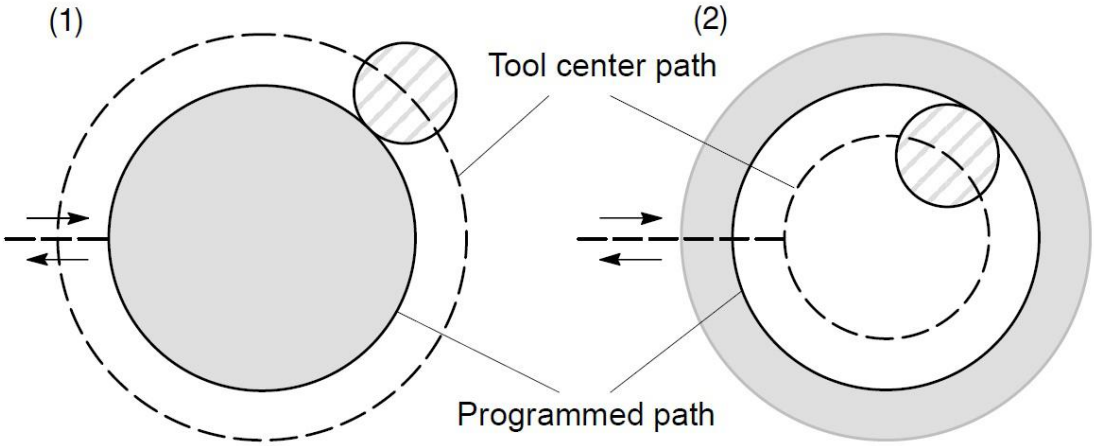

Fig3.20.4 Tool center paths when positive and negative tool compensation values are specified.

Note: 1. The tool compensation value corresponding to offset No.0, that is, D0 always means 0. It is impossible to set D0 to any other offset amount.

2. Tool compensation C can be specified by D code.

The offset vector is the two dimensional vector that is equal to the tool compensation value assigned by D code. It is calculated inside the control unit, and its direction is updated in accordance with the progress of the tool in each block. The offset vector is deleted by reset.

Specify a tool compensation value with a number assigned to it. The number consists of 01 to 99 after address D (D code). The D code is valid until another D code is specfied. The D code is used to specify the tool offset value as well as the cutter compensation value.

Offset calculation is carried out in the plane determined by G17, G18 and G19, (G codes for plane selection). This plane is called the offset plane. Compensation is not executed for the coordiante of a position which is not in the specified plane. The programmed values are used as they are. In simultaneous 3 axes control, the tool path projected on the offset plane is compensated.

The offset plane is changed during the offset cancel mode. If it is performaed during the offset mode, CNC system will alarm and stop moving.

Example:

G54 X0 Y0 Z0 ; .....Specifies a workpiece coordiantes system.
The tool is positioned at the start position (X0, Y0, Z0).

N1 G90 G17 G00 G41 D03 X250.0 Y550.0; Starts tool compensation(start-up). Tool is shifted to the left of the programmed path by the distance specified in D03. In other words the tool path is shifted by the radius of the tool (offset mode)Because D03 is set to 15 beforehand(the radius of the tool is 15mm).

N2 G01 Y900.0 F150 ; .....Spcifies machining from P1 to P2.
N3 X450.0 ; .....Spcifies machining from P2 to P3.
N4 G03 X500.0 Y1150.0 R650.0 ;.....Specifies machining from P3 to P4.
N5 G02 X900.0 R-250.0 ;.....Specifies machining from P4 to P5.
N6 G03 X950.0 Y900.0 R650.0 ;.....Specifies machining from P5 to P6.
N7 G01 X1150.0 ;.....Specifies machining from P6 to P7.

N8 Y550.0 ;.....Specifies machining from P7 to P8.
N9 X700.0 Y650.0.....Specifies machining from P8 to P9.
N10 X250.0 Y550.0.....Specifies machining from P9 to P1.
N11 G00 G40 X0 Y0.....Cancel the offset mode.
The tool is returned to the start position (X0, Y0, Z0).

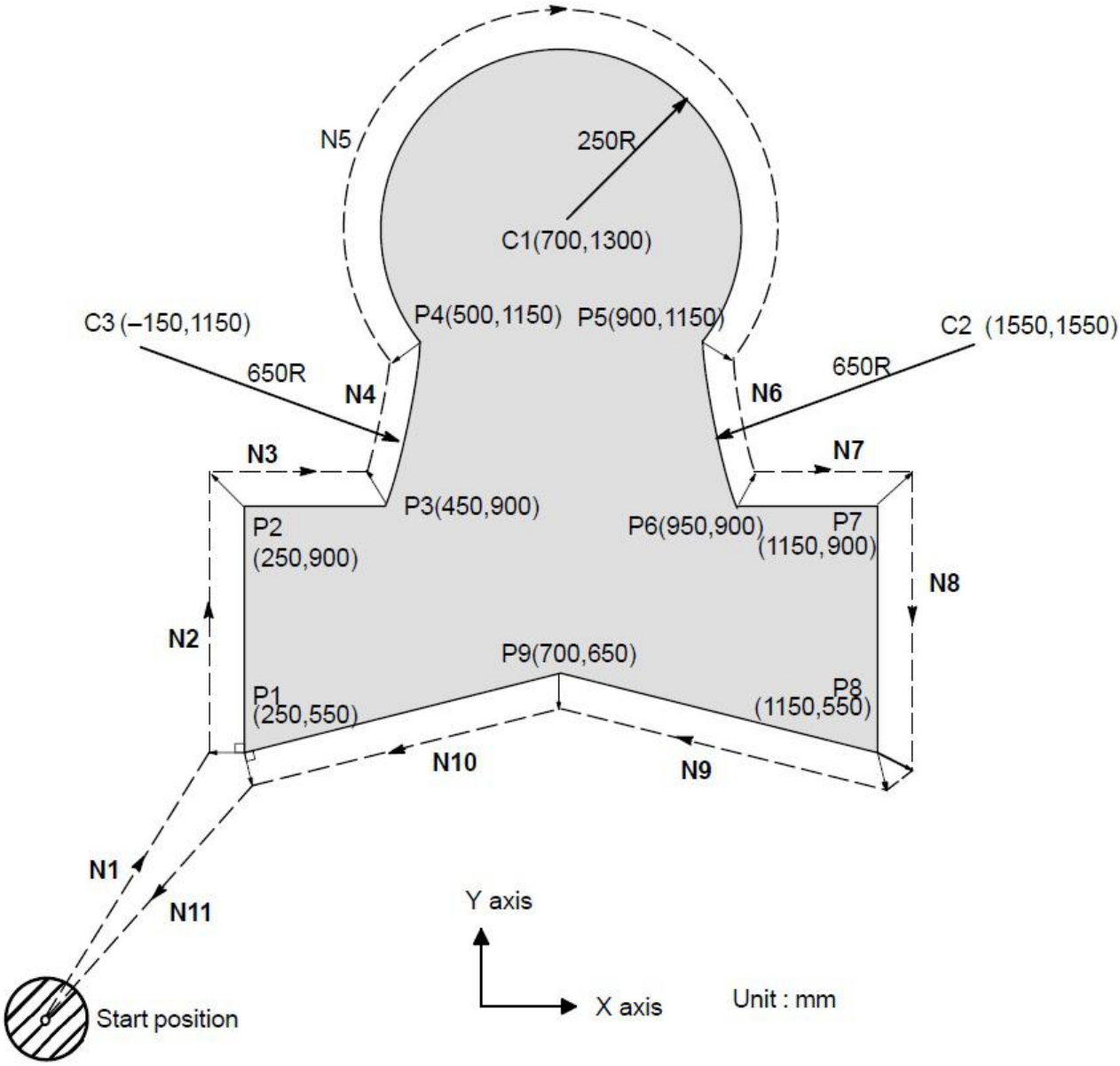

Fig3.20.5 Example of Tool Compensation C

3.27 Details of Tool Compensation C

This section provides a detailed explanation of the movement of the tool for tool compensation C outlined in Section 3.20.

3.27.1 Inside and outside

When an angle of intersection created by tool paths specified with move commands for two blocks is over 180º, it is referred to as "Inside". When the angle is between 0º and 180º, it is referred to as "Outside".

Inside	Outside
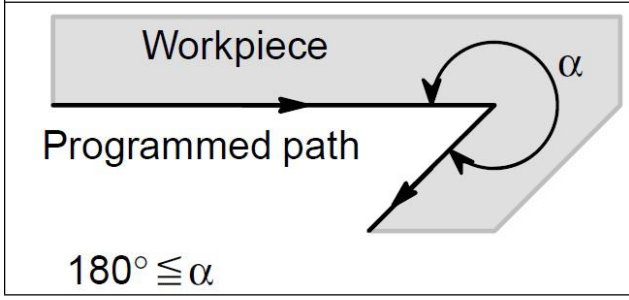	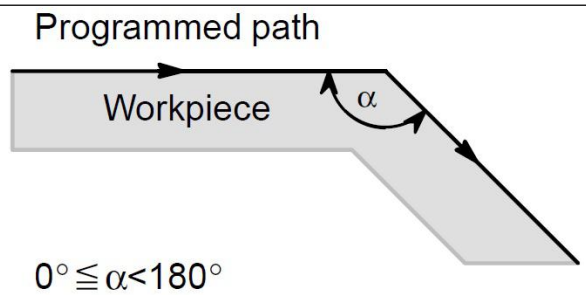

The following symbols are used in subsequent figures:

S: a position at which a single block is executed once. L: the tool moves along a straight line.

SS : a position at which a single block is executed twice. o : the center of the tool.

C: the tool moves along a arc. r: the tool compensation value.

An intersection is a position at which the programmed paths of two blocks intersect with each other after they are shifted by r.

3.27.2 Tool movement when start-up

When the offset cancel mode is changed to offset mode, the tool moves as illustrated below:

Tool path in start-up has two types A and B, and they are selected by P1 on Tool parameter.

(1) Tool movement around an inside of a corner (α≥180º)

Linear ⟶ Linear	Linear ⟶ Circular
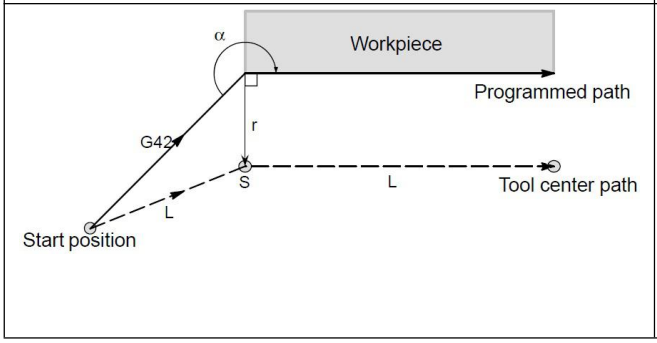	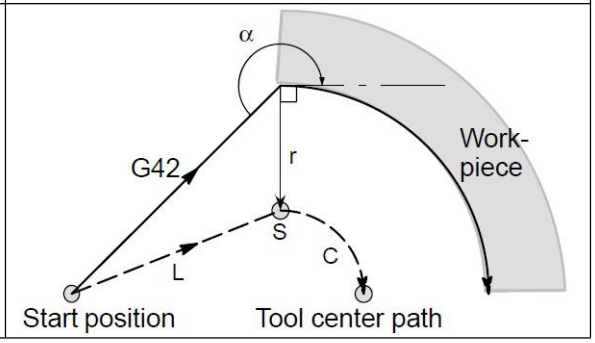

(b) Tool movement around the outside of a corner at obtuse angle (90≤α＜180)

Linear ⟶ Linear (A type)	Linear ⟶ Linearr (B type)
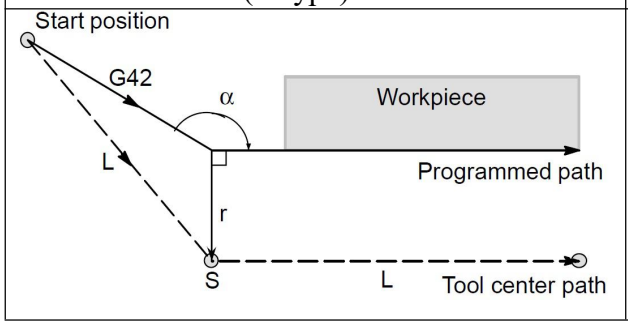	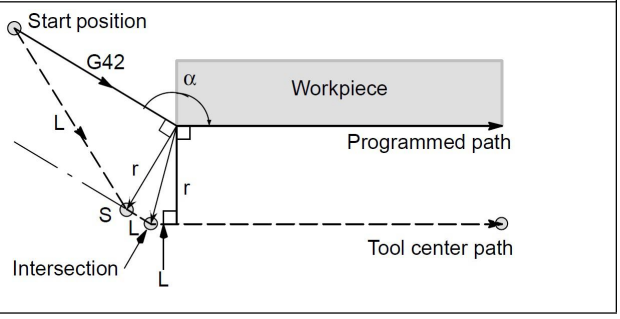

Linear ⟶ Circular (A type)	Linear ⟶ Circular (B type)
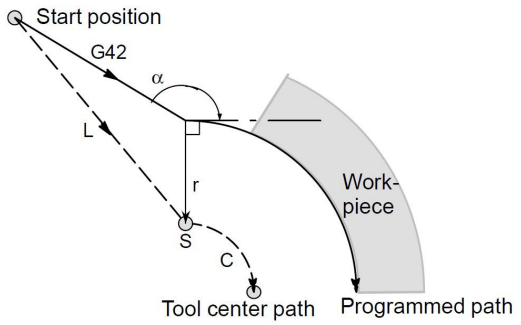	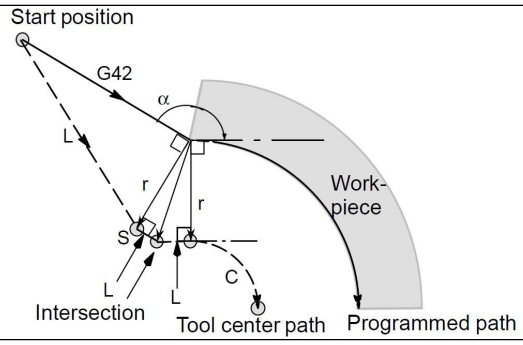

(c)Tool movement around the outside of an acute angle (α＜90º)

Linear ⟶ Linear (A type)	Linear ⟶ Linear (B type)
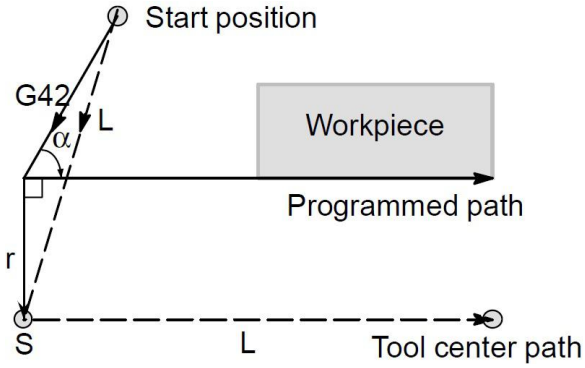	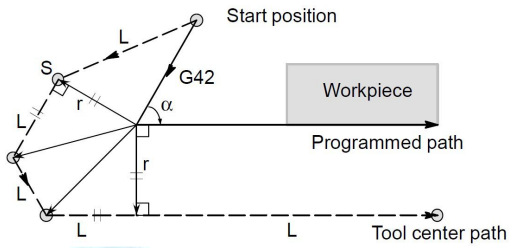
Linear ⟶ Circular (A type)	Linear ⟶ Circular (B type)
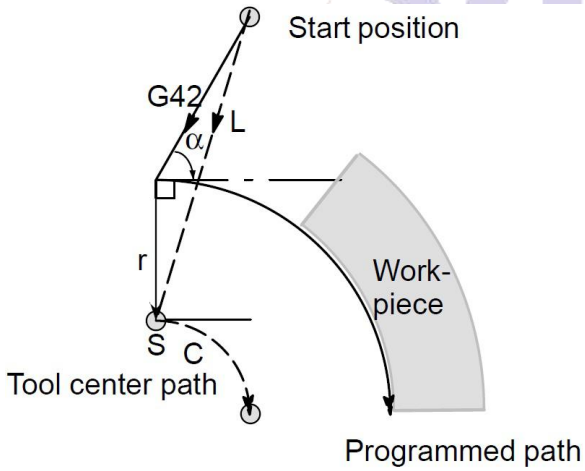	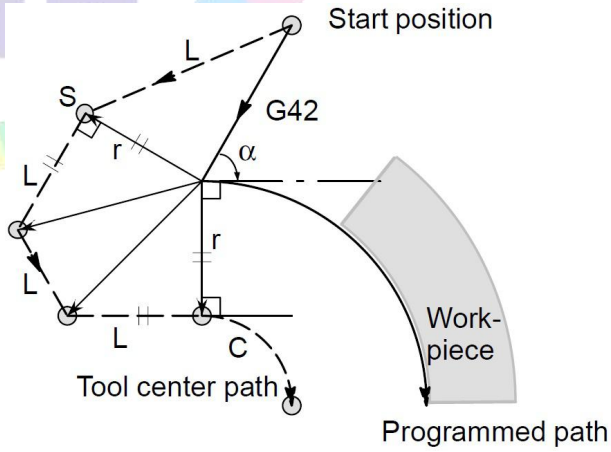

d)Tool movement around outside linear to linear at an acute angle less than 1 degree (α＜1º)

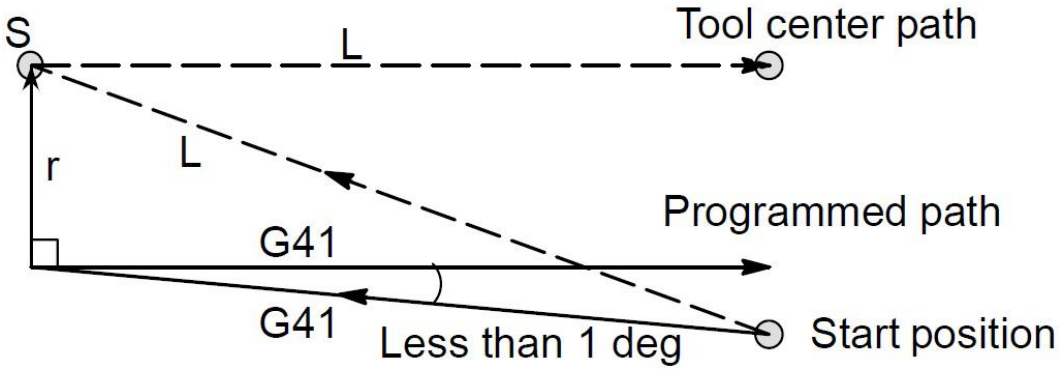

Fig3.21.1 Tool Movement at angle less than 1º

d) A block without tool movement specified at start-up: If the command is specified at start-up, the offset vector isn't created. for the definition of blocks that donot move the tool, see 3.20.

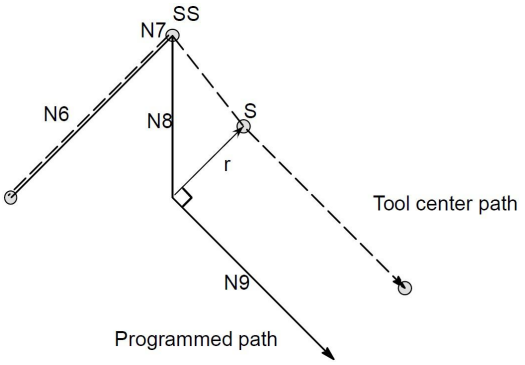


```
G91 G40... ;
...
N6 X100.0 Y100.0 ;
N7 G41 X0 ;
N8 Y-100.0 ;
N9 Y-100.0 X100.0 ;
```

Fig3.21.2 A block without tool movement

3) Tool Movement in Offset Mode

In the offset mode, the tool moves as illustrated below:

(a)Tool movement around the inside of a corner (180º≤α)

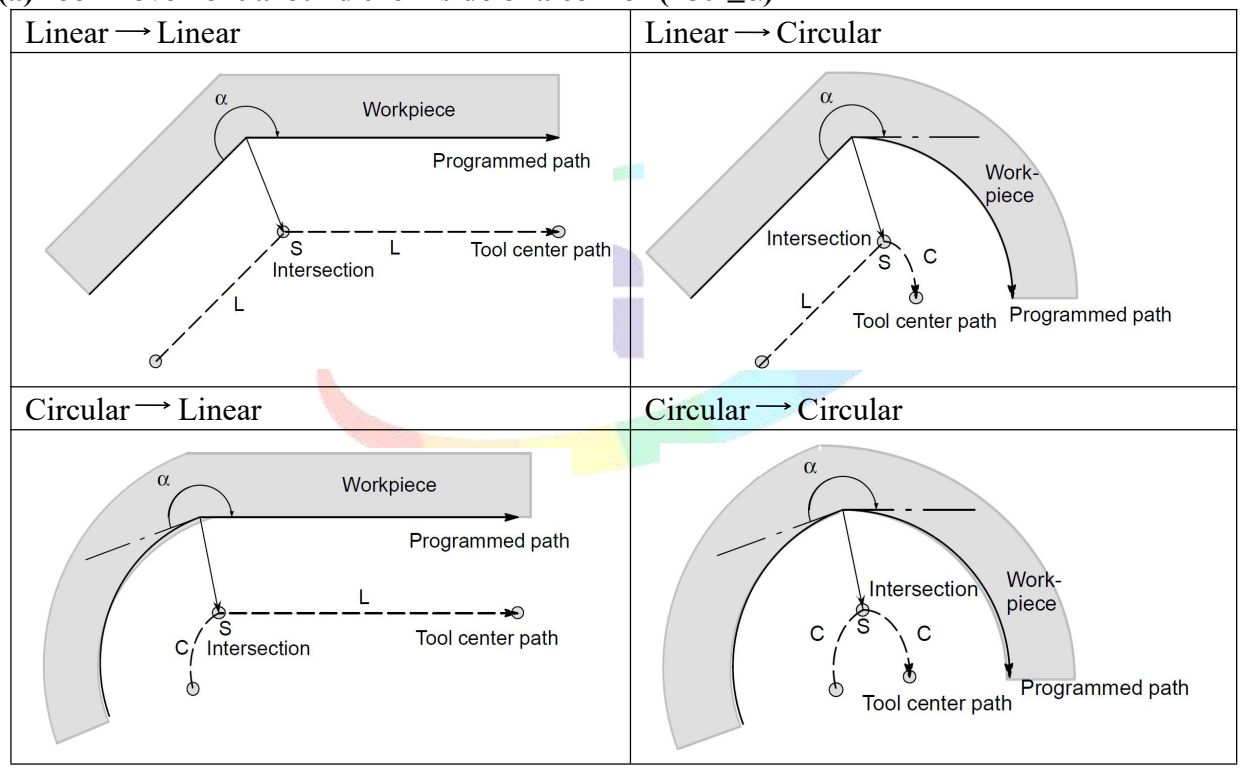

(b)Tool movement around the inside (α<1º) with an abnormally long vector, linear→linear.

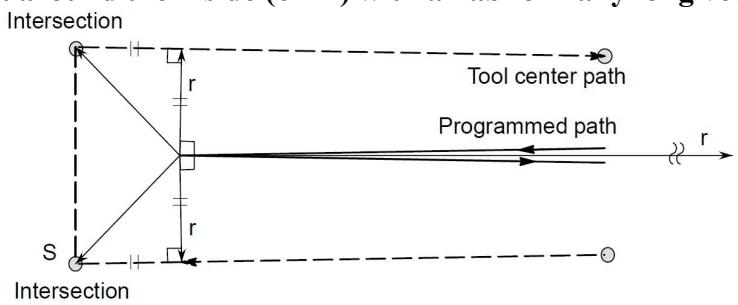

Fig3.21.3 Tool Movement at angle less than 1º

Also in case of arc to straight line, straight line to arc and arc to arc, the reader should infer in the same procedure.

(c)Tool movement around the outside corner at an obtuse angle (90≤α＜180º)

Linear ⟶ Linear	Linear ⟶ Circular
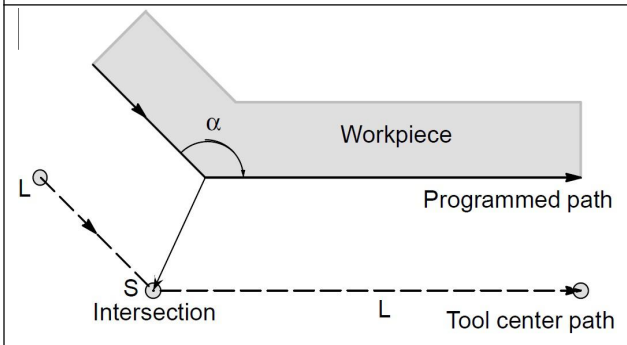	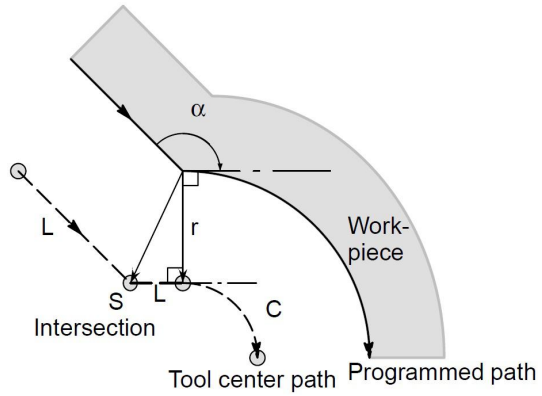
Circular ⟶ Linear	**Circular ⟶ Circular**
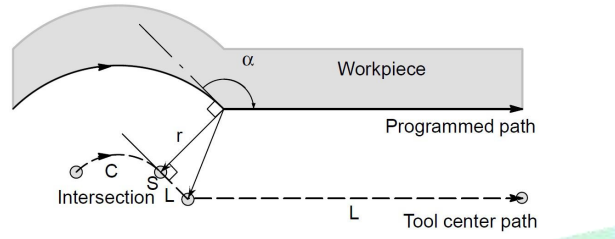	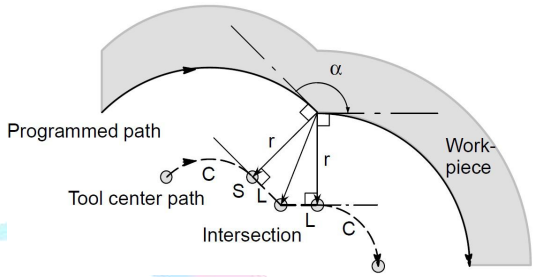

(d)Tool movement around the outside corner at an acute angle (α＜90º)

Linear ⟶ Linear	Linear ⟶ Circular
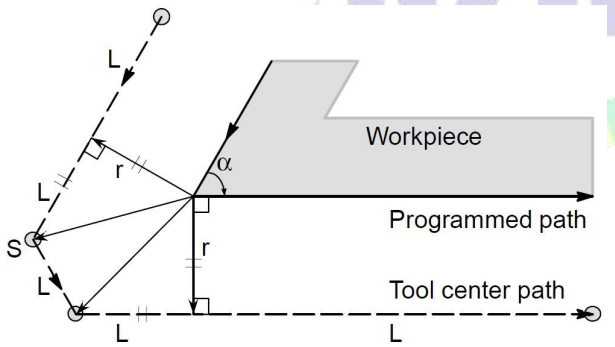	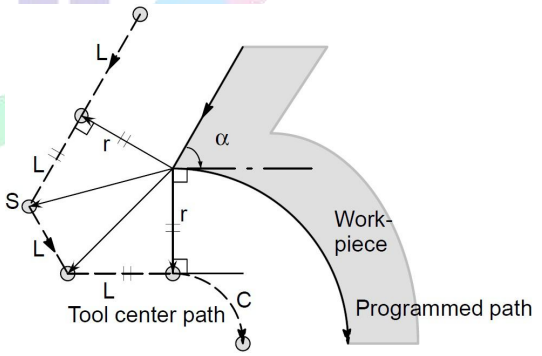
Circular ⟶ Linear	**Circular ⟶ Circular**
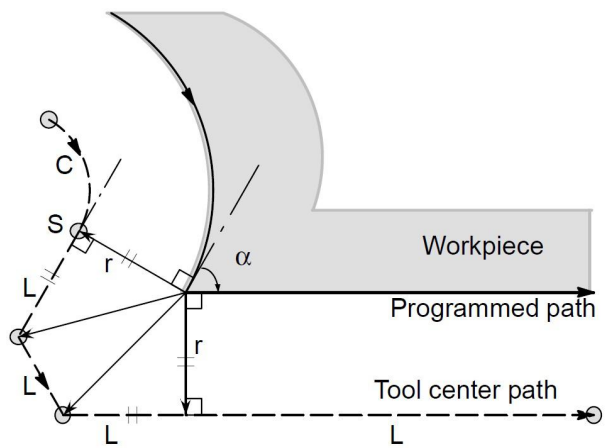	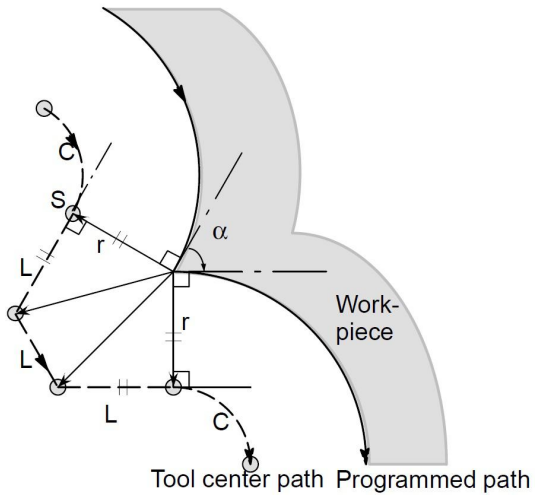

4) Tool Movement in Offset Mode Cancel

Tool path has two types, A and B; and they are selected by P2 in Tool parameter.

(a) Tool movement around an inside corner (180º≤α)

Linear ⟶ Linear	Linear ⟶ Circular
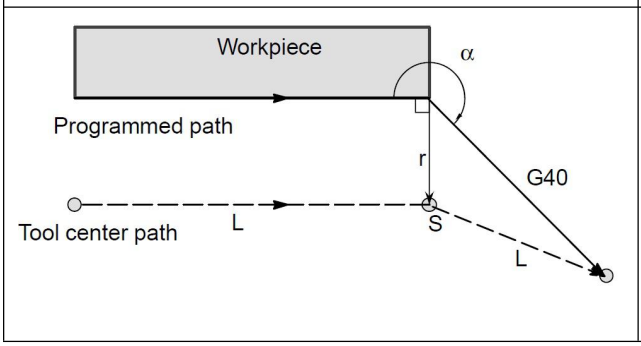	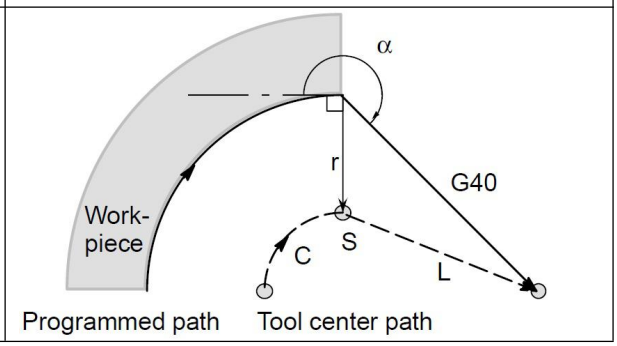

(b) Tool Movement around an outside corner at obtuse angle (90≤α＜180º)

Linear ⟶ Linear(A type)	Linear ⟶ linear(B type)
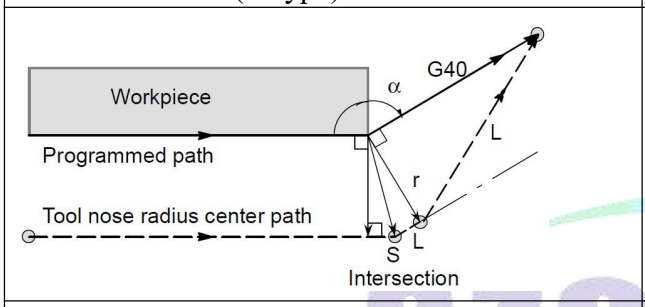	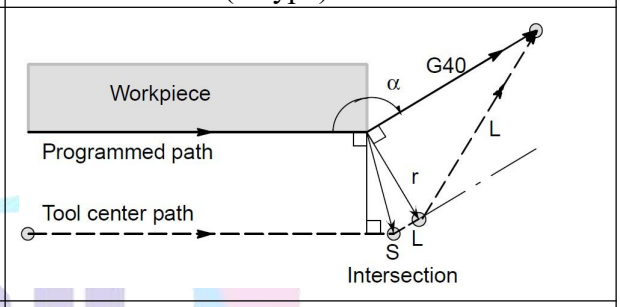
Linear ⟶ Circular(A type)	**Linear ⟶ Circular(B type)**
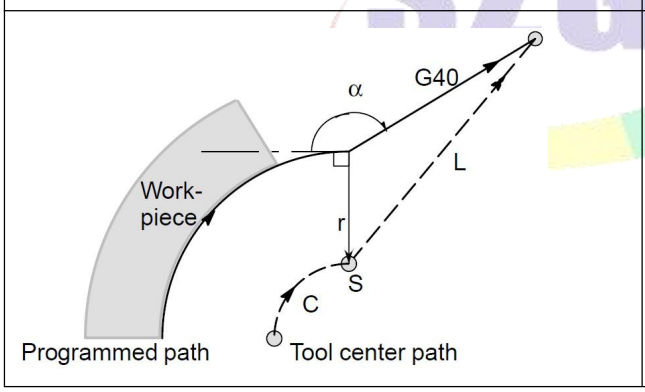	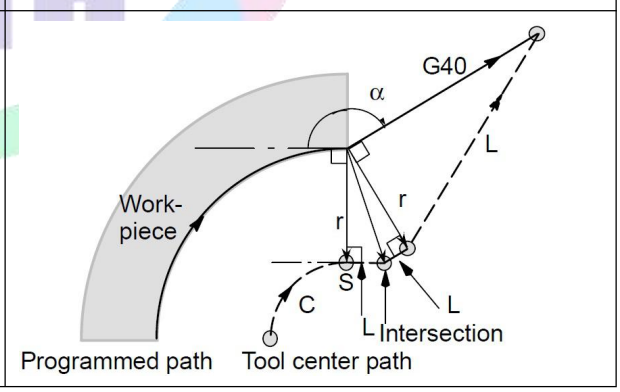

(c) Tool Movement around an outside corner at acute angle (α＜90º)

Linear ⟶ Linear(A type)	Linear ⟶Linear(B type)
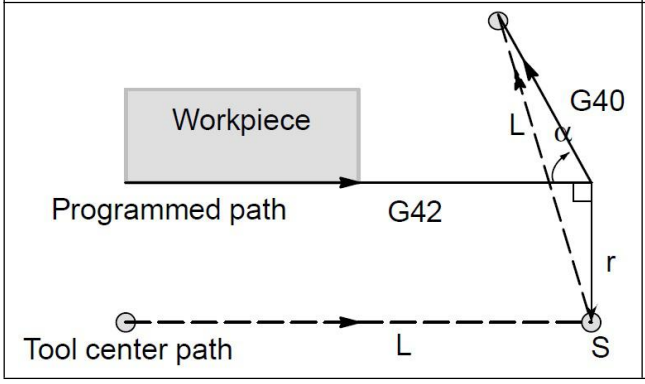	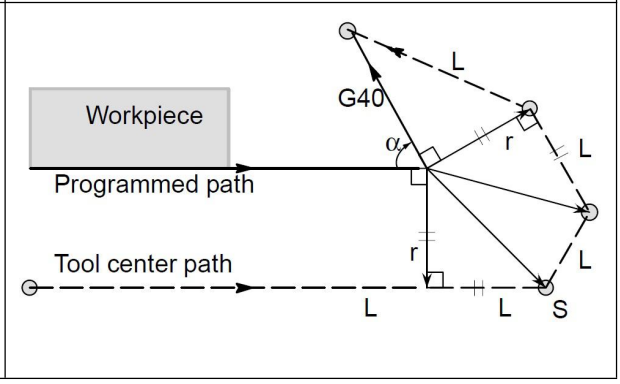

Circular⟶ Linear(A type)	Circular⟶ Linear(B type)
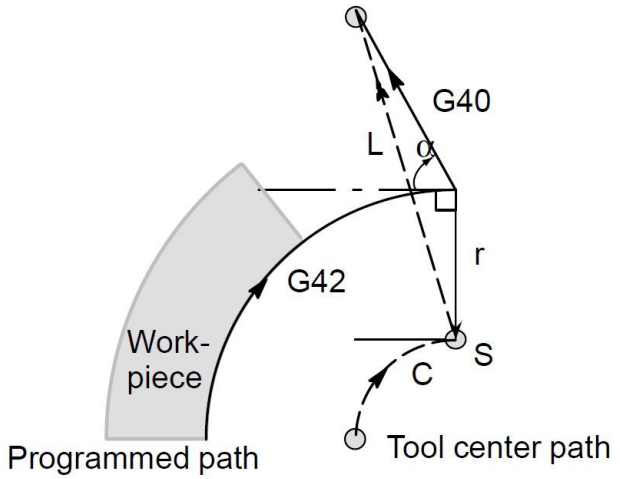	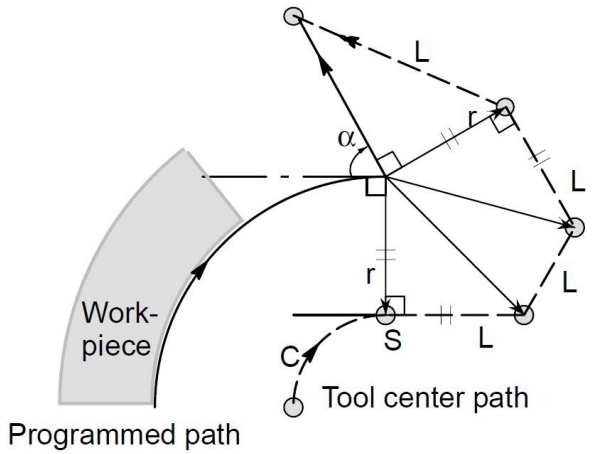

(d) Tool movement around outside linear to linear at an acute angle less than 1 degree(α<1º)

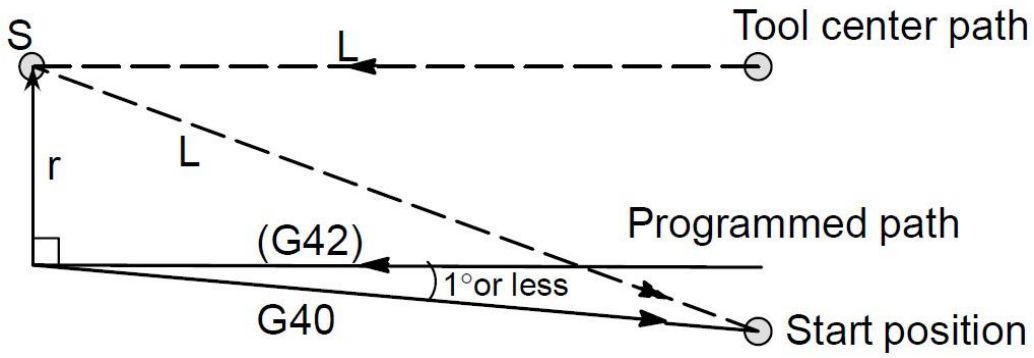

Fig3.21.4 Tool Movement at angle less than 1

(e) A block without tool movement specified together with offset cancel

When a block without tool movement is commanded together with an offset cancel, a vector whose length is equal to the offset value is produced in a normal direction to tool motion in the earlier block, the vector is cancelled in the next move command.

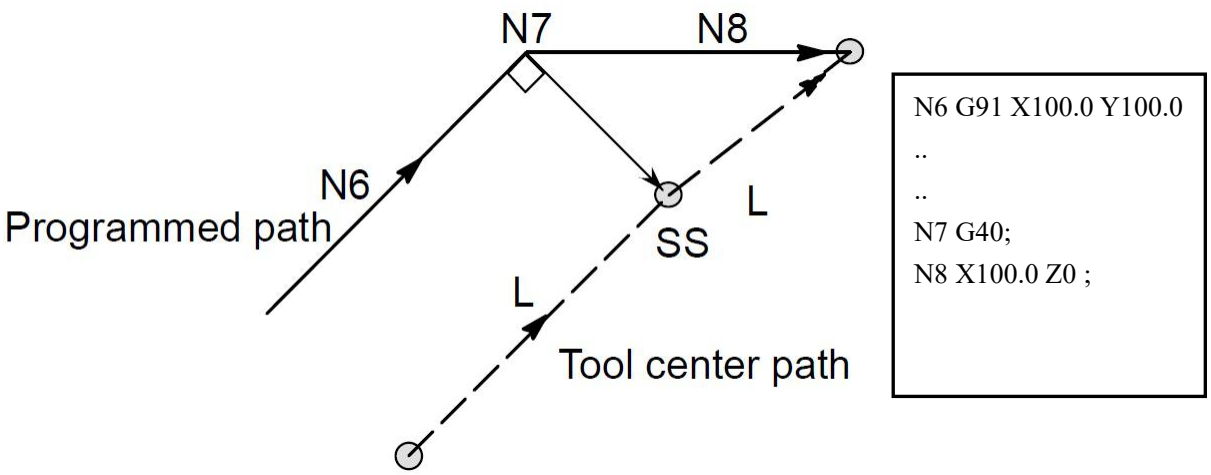

Fig3.21.5 A block without tool movement

3.28 Canned Cycle (G73-G89)

Canned cycles make it easier for the programmer to create programs. With a canned cycle, a frequently-used machining operation can be specified in a single block with a G function; without canned cycles,normally more than one block is required. In addition, the use of canned cycles can shorten the program to save memory.

Table3.22 Canned Cycles

G code	Feed mode (-Z direction)	Operation at the bottom of hole	Retraction (+Z direction)	Application
G73	Intermittent feed	-	Rapid traverse	High-speed peck drilling cycle
G74	Feed	Dwell → SP CW	Feed	Left-hand tapping cycle
G76	Feed	Oriented SP Stop	Rapid traverse	Fine boring Cycle
G80	-	-	-	Cancel
G81	Feed	-	Rapid traverse	Drilling cycle,spot drilling cycle
G82	Feed	Dwell	Rapid traverse	Drilling cycle, spot drilling cycle
G83	Intermittent feed	-	Rapid traverse	Peck drilling cycle
G84	Feed	Dwell → SP CCW	Feed	Tapping cycle
G85	Feed	-	Feed	Boring cycle
G86	Feed	Spindle Stop	Rapid traverse	Boring cycle
G87	Feed	Spindle CW	Rapid traverse	Back boring cycle
G89	Feed	Dwell	Feed	Boring cycle

A canned cycle consists of a sequence of six operations(Fig3.22.1)

Operation 1 Position of X and Y axis(including also another axis)
Operation 2 Rapid traverse up to point R level
Operation 3 Hole Machining
Operation 4 Operation at the bottom of a hole
Operation 5 Retraction to point R level
Operation 6 Rapid traverse up to the initial point

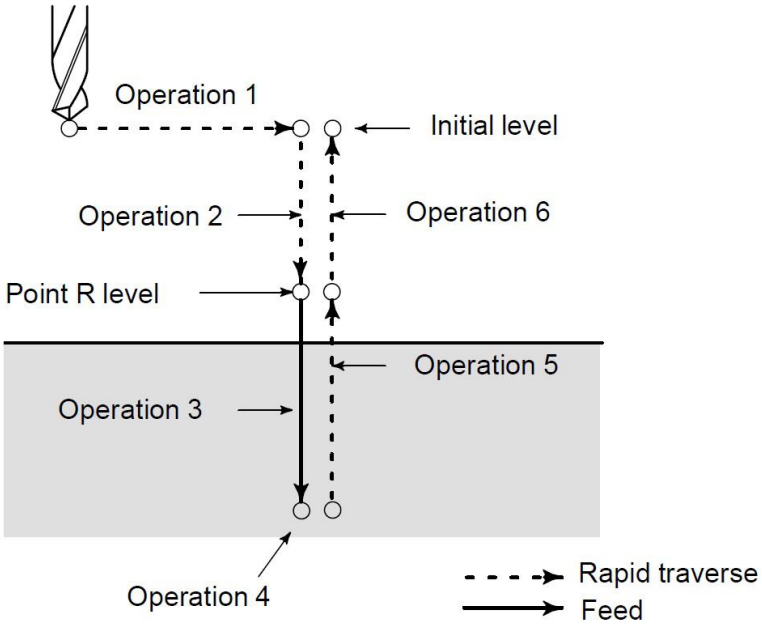

Fig3.22.1 Canned cycle operation sequence

The positioning plane is determined by plane selection code G17,G18 or G19.The positioning axis is an axis other than the drilling axis.P47 in Speed parameter + 2 is set for this function.

Although canned cycles include tapping and boring cycles as well as drilling cycles, in this chapter, only the term drilling will be used to refer to operations implemented with canned cycles.

The drilling axis is a basic axis(X,Y, or Z) not used to define the positioning plane, or any axis parallel to that basic axis.The axis(basic axis or parallel axis) is used as the drilling axis is determined according to the axis address for the drilling axis specified in the same block as G codes G73 to G89.If no axis address is specified for the drilling axis, the basic axis is assumed to be the drilling axis.

G code	Positioning Plane	Drilling axis
G17	Xp-Yp plane	Zp
G18	Zp-Xp plane	Yp
G19	Yp-Zp plane	Xp

Xp: X axis or an axis parallel to the X axis

Yp: Y axis or an axis parallel to the Y axis

ZP: Z axis or an axis parallel to the Z axis

Travel distance along the drilling axis varies for G90 and G91 as follows:

G90(Absolute command)	G91(Incremental Command)
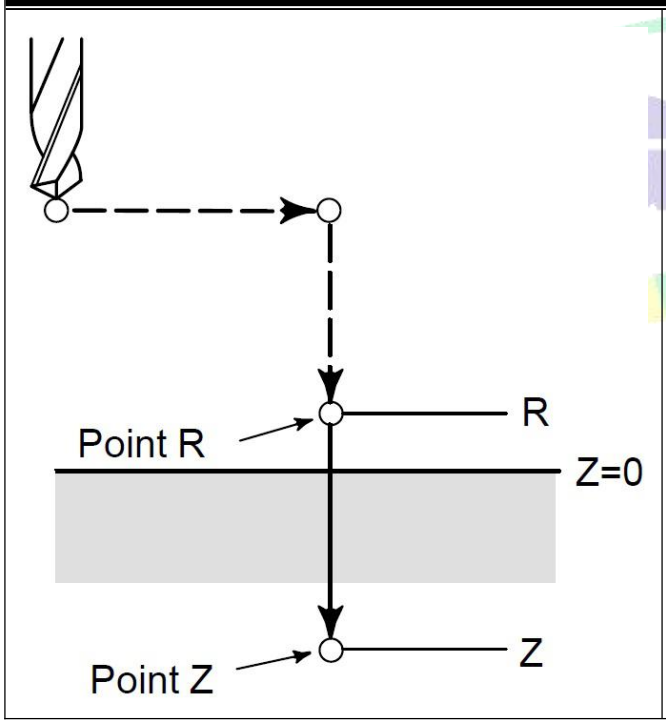	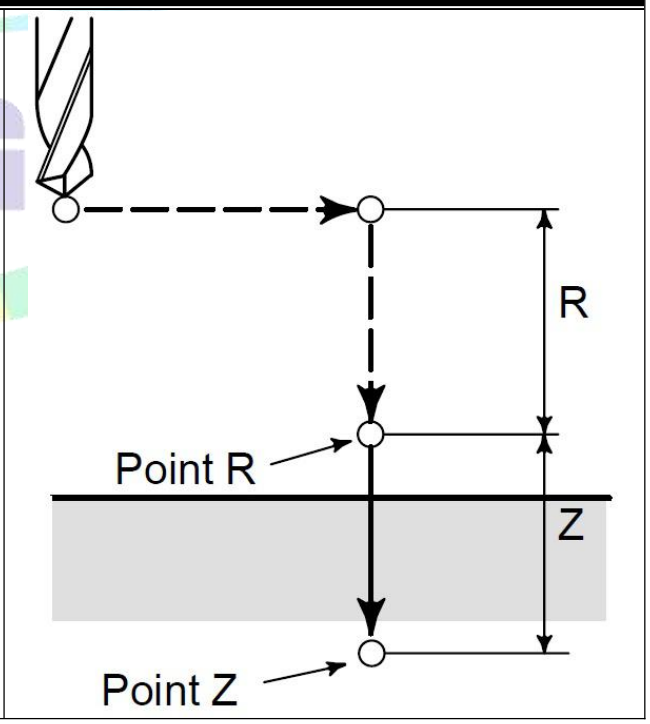

Drilling Mode: G73, G74 and G81 to G89 are modal G codes and remain in effect until canceled. When in effect, the current state is the drilling mode. Once drilling data is specified in the drilling mode, the data is retained until modified or canceled.

Specify all necessary drilling data at the beginning of canned cycles; when canned cycles are being performed, specify data modifications only.

Return point level G98/G99: When the tool reaches the bottom of a hole, the tool may be returned to point R or to the initial level. These operations are specified with G98 and G99. The following illustrates how he tool moves when G98 or G99 is specified. Generally, G99 is used for the first drilling operation and G98 is used for the last drilling operation.

The initial level doesnot change even when drilling is performed in the G99 mode.

G98 (Return to initial level)	G99(Return to point R level)
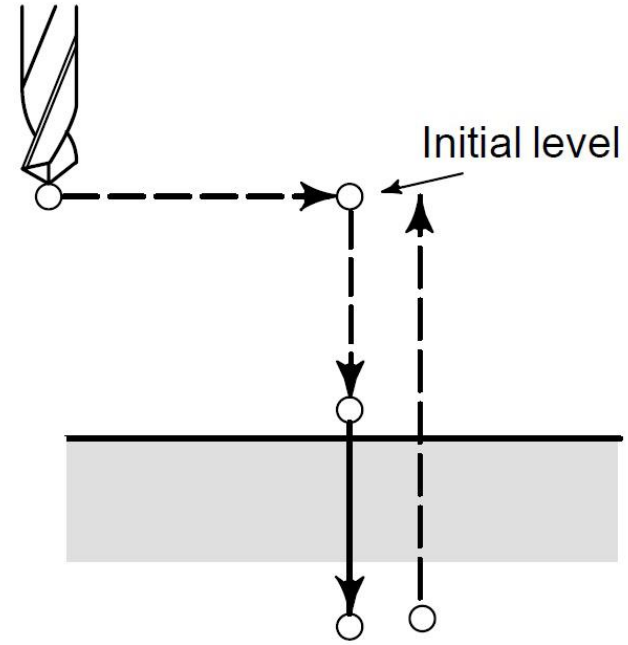	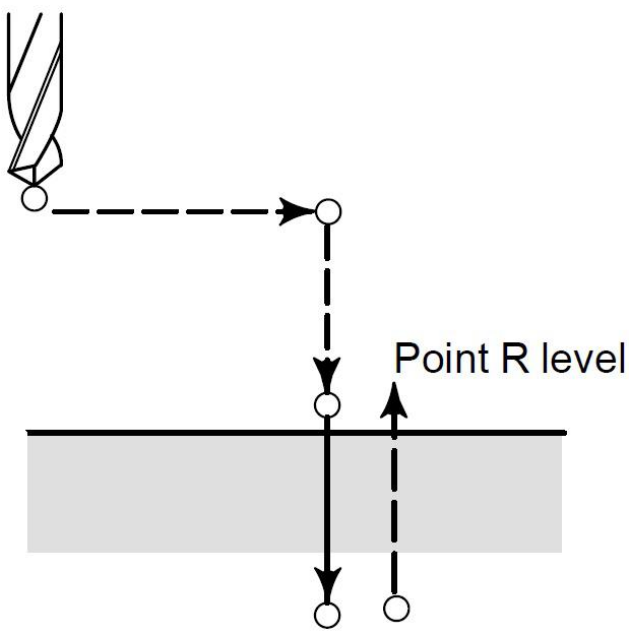

Repeat: To repeat drilling for equally-spaced holes, specify the number of repeats in L_.

K is effect only within the block where it is specified. The max value of L is 9999. Default=1.

To cancel a canned cycle, use G80 or a group 01 G code.

Group 01 G codes

G00: Positioning (Rapid traverse)

G01: Linear interpolation

G02: Circular interpolation or helical interpolation (CW)

G03: Counter-Circular interpolation or helical interpolation (CCW)

Symbos in figures: Subsequent sections explain the individual canned cycles. Figures in these explanations use the following symbols:

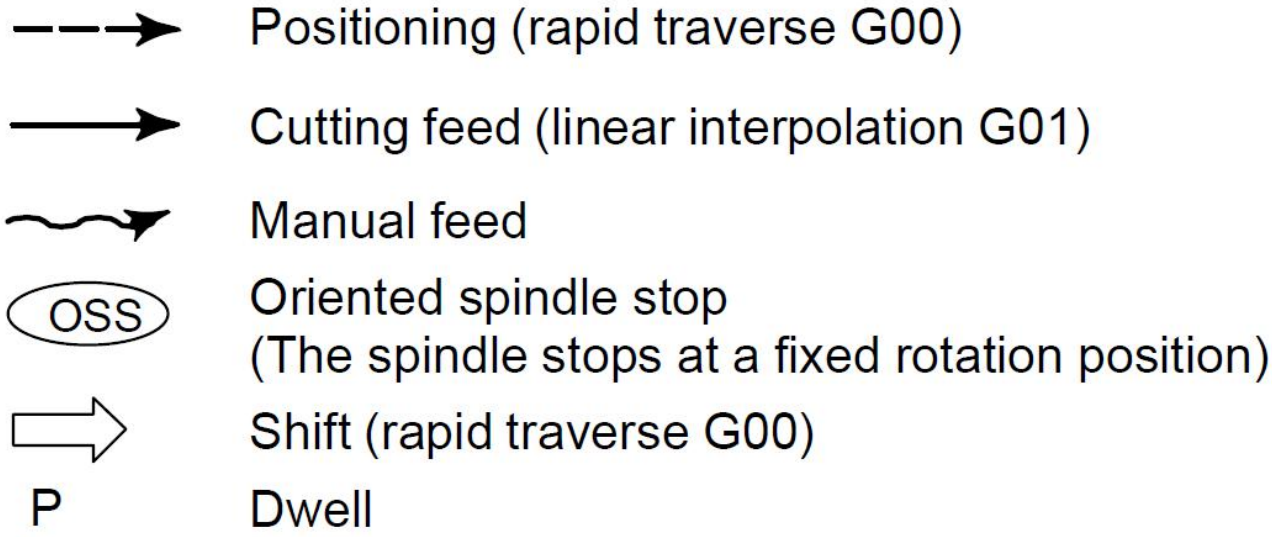

3.27.1 High-speed Peck Drilling Cycle(G73)

This cycle performs high-speed peck drilling. It performs intermittent cutting feed to the bottom of a hole while removing chips from the hole.

Format: G73 X_Y_Z_R_Q_F_L_ ;

X_Y_: hole position data
Z_: The distance from point R to bottom of the hole
R_: The distance from the initial level to point R level
Q_: Depth every time
F_: Cutting feedrate
L_: Number of repeatss

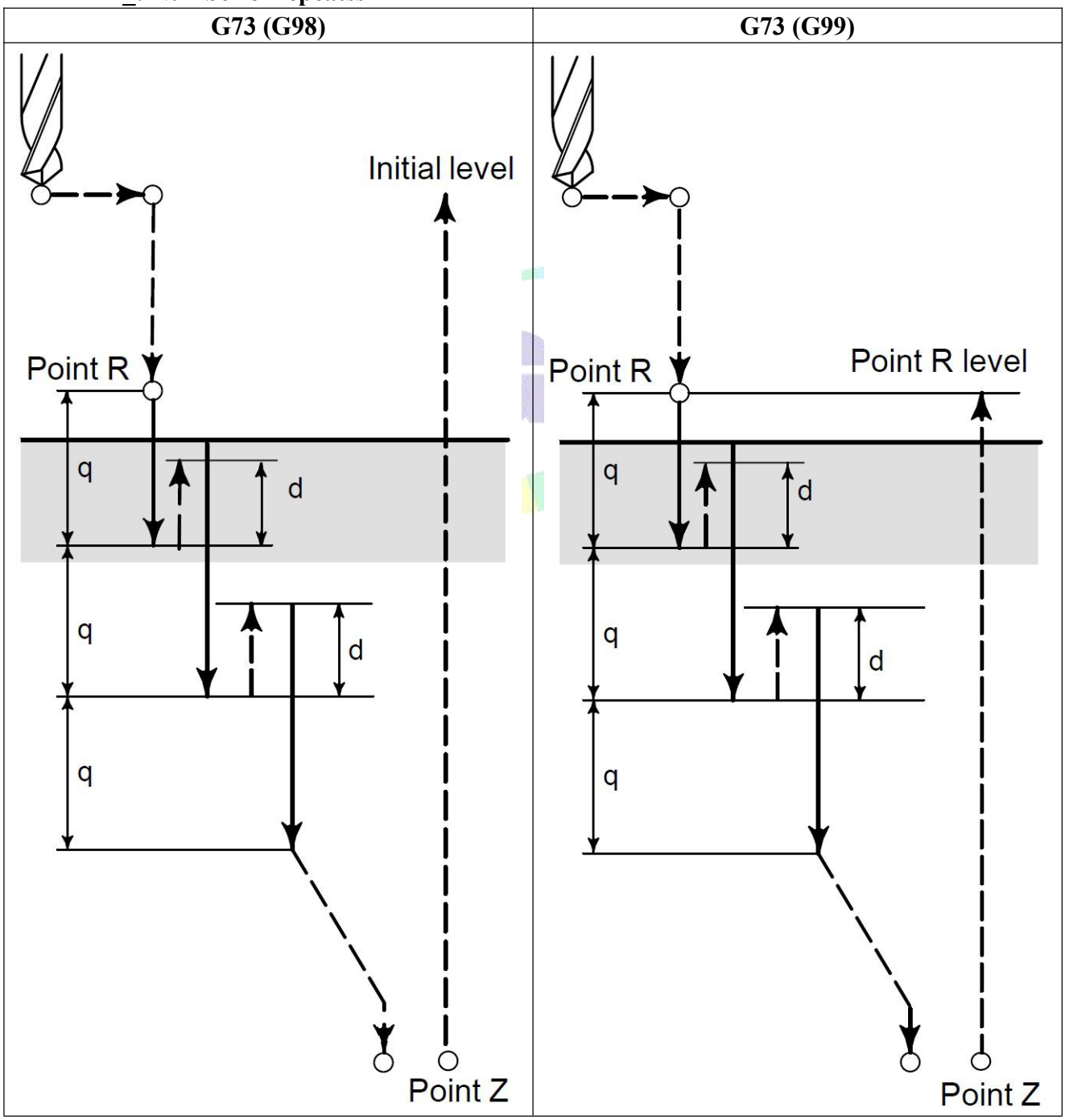

The high-speed peck drilling cycle performs intermittent feeding along the Z-axis. When this cycle is used,chips can be removed from the hole easily,and a smaller value can be set for retraction. This allows drilling to be performed effectively.

P1 in User parameter sets the value of clearance(d).

The tool is retracted in rapid traverse.

Before specifying G73, rotate the spindle using a miscellaneous function (M code).When the G73 code and an M code are specified in the same block, the M code is executed at the time of the first positioning operation. The system then proceeds to the next drilling operation.

When a tool length offset(G43 G44 or G49) is specified in the canned cycle, the offset is applied at the time of positioning to point R.

Note: 1. In a block that doesnot contain R,Q , drilling isnot performed.Specify R and Q in blocs that perform drilling. If they are specified in a block that doesnot perform drilling, they cannot be stored as modal data.

2. Do not specify a G code of the 01 group(G00-G03) and G73 in a single block.Otherwise, G73 will be canceled.

3. In the canned cycle mode, tool offsets are ignored.

4. Before the drilling axis can be changed, the canned cycle must be canceled.

Example:

```
M3 S2000 ;                    Cause the spindle to start rotating
G90 G99 G73 X300. Y-250. Z-150. R-100. Q15. F120. ;
                              Position, Drill 1st hole, then return to point R.
Y-550. ;                      Position, Drill 2nd hole, then return to point R.
Y-750. ;                      Position, Drill 3rd hole, then return to point R.
X1000. ;                      Position, Drill 4th hole, then return to point R.
Y-550. ;                      Position, Drill 5th hole, then return to point R.
G98 Y-750. ;                  Position, Drill 6th hole, then return to the intital level.
G80 G28 G91 X0 Y0 Z0;         Erturn to the reference position.
M05 ;                         Cause the spindle to stop rotating
```

3.28.2 Left-handed Peck Rigid Tapping Cycle (G74)

This cycle performs left-handed tapping. In the left-handed tapping cycle, when the bottom of the hole has been reached, the spindle rotates clockwise.

Tapping a deep hole in rigid tapping mode may be difficult due to chips sticking to the tool or increased cutting resistance. In such cases, the peck rigid tapping cycle is useful.

This cycle may be performed in standard mode or rigid tapping mode.

In stardard mode, the spindle is rotated and stopped along with a movement along the tapping axis using miscellaneous functions M03 (Rotating the spindle clockwise), M04 (rotating the spindle counterclockwise), and M05 (Stopping the spindle) to perform tapping following with SP-Encoder.

In Rigid tapping mode, tapping is performed by controlling the spindle motor as if it were a servo motor and by interpolation between the tapping axis and spindle. When tapping is performed in rigid mode, the spindle rotates one turn every time a certai feed(thread lead) which taks place along the tapping axis. This operation doe not vary even during acceleration or deceleration.

Format: G74 X_ Y_ Z_ R_ P_ K_ Q_ L_ S_ ;

X_ Y_ : Hole position data
Z_ : The distance from point R to the bottom of the hole
R_ : The distance from initial level to point R level
P_ : Dwell time unit:s
K_ : Pitch
Q_ : Depth of cut for each cutting feed
L_ : Number of repeats (if required)
S_ : Spindle feedrate

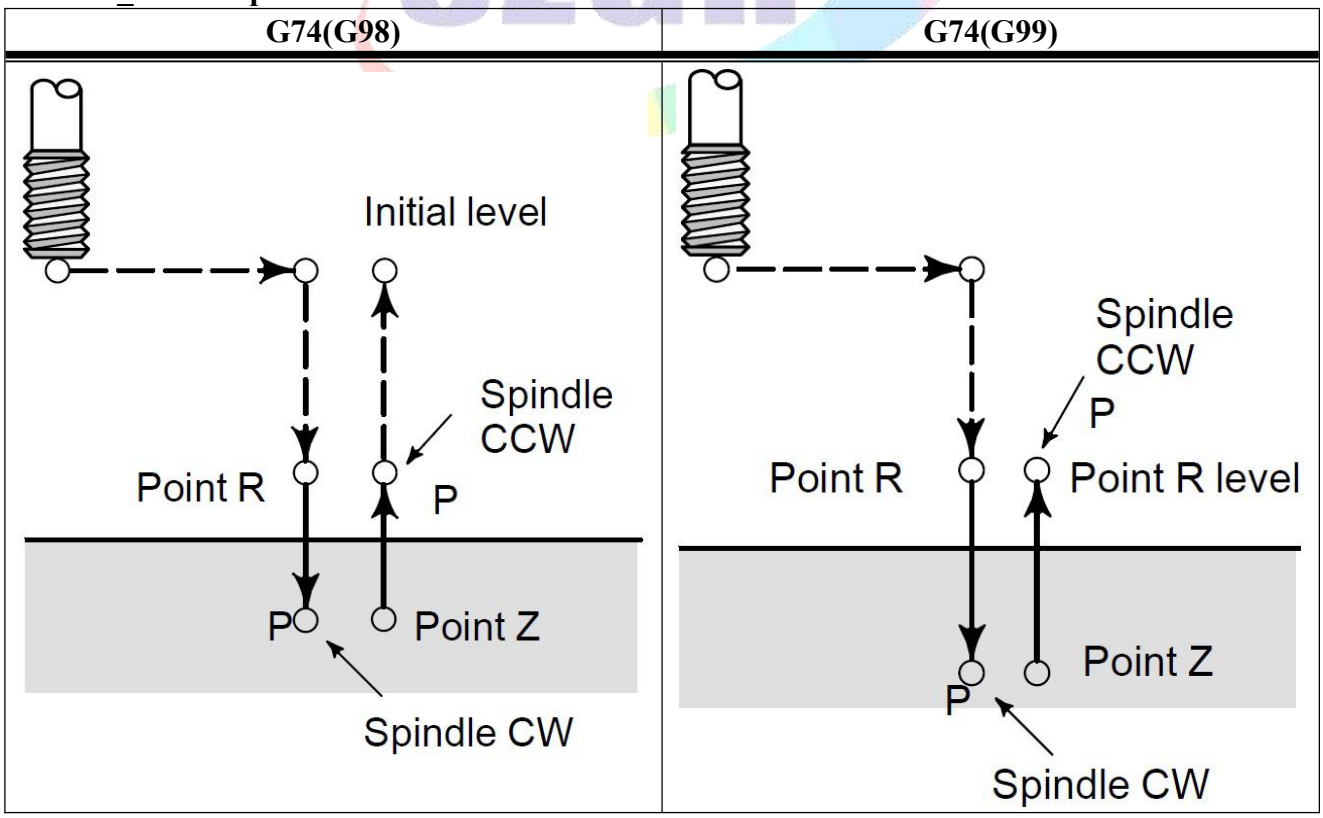

Tapping is performed by turning the spindle counterclockwise. When the bottom of the hole has been reached, the spindle is rotated clockwise for retraction. This creates a reverse thread.

Feedrate overrides are ignored during left-handed tapping. A feed hold doesnot stop the machine until the return operation is completed.

Before specifying G74, use a miscellaneous function(M code) to rotate the spindle counterclockwise.

When the G74 command and an M code are specified in the same block, the M code is executed at the time of the first position operation. The system then proceeds to the next drilling operation.

When a tool length offset (G43, G44, or G49) is specified in the canned cycle, the offset is applied at the time of positioning to point R.

Note: 1. Before the drilling axis can be changed, the canned cycle must be canceled.

2. In a block that does not contain R, K , drilling is not performed.

3. Specify P in blocs that perform drilling. If they are specified in a block that doesnot perform drilling, they cannot be stored as modal data.

4. Do not specify a G code of the 01 group(G00-G03) and G73 in a single block.Otherwise, G73 will be canceled.

5. In the canned cycle mode, tool offsets are ignored.

6. During rigid tapping, Spindle-feedrate override and Feed-feedrate override don't work.

Parameters Sets for Rigid Tapping:

1, Standard tapping, following Spinlde_Encoder mode, P411=2 in Axis parameter, CNC system must be configured with SP-encoder

Special Note: When the transmission ratio between Spindle and Encoder is not 1:1, it must be configured with SZGH Transfer Board & modify P412 & P413 in Axis parameter;

412, Number of spindle teeth

413, Number of encoder teeth

2, Rigid tapping, interpolation between Spindle & Drilling axis, P405=5, P410=94, P411=3 in Axis parameter..

M75: Shift control mode of spindle to Positon Control Mode(Pulse+Direction). After rigid tapping, M74, cancel position control mode of spindle.

Rigid mode eliminates the need to use a floating tap required in the standard tapping mode, thus allowing faster and more precise tapping.

Example:

```
N1 M4 S100 ;                    Cause the spindle to start rotating CCW.
N2 G90 G99 G74 X300. Y-250. Z-150. R-100. K5 ;
                                Position, tapping hole 1, then return to point R.
N3 Y-550. ;                     Position, tapping hole 2, then return to point R.
N4 Y-750. ;                     Position, tapping hole 3, then return to point R.
N5 X1000. ;                     Position, tapping hole 4, then return to point R.
N6 Y-750. ;                     Position, tapping hole 5, then return to point R.
N7 G98 Y-550. K5;               Position, tapping hole 6, then return to the initial level
N8 G80 G28 G91 X0 Y0 Z0; Return to the reference position.
N9 M05;                         Cause the spindle to stop rotating.
```

3.28.3 Fine Boring Cycle (G76)

The fine boring cycle bores a hole precisely. When the bottom of the hole has been reached, the spindle stops, and the tool is moved alway from the machined surface of the workpiece and retracted with the direction that set by P3 in User parameter.

Format: G76 X_ Y_ Z_ R_ Q_ P_ F_ L_ ;

X_Y_ : Hole position data.
Z_ : The distance from point R to the bottom of the hole.
R_ : The distance from the initial level to point R level.
Q_ : Shift amount at the bottom of a hole.
P_ : Dwell time at the bottom of a hole. Unit:s.
F_ : Cutting feedrate.
L_ : Number of repeats (if required) .

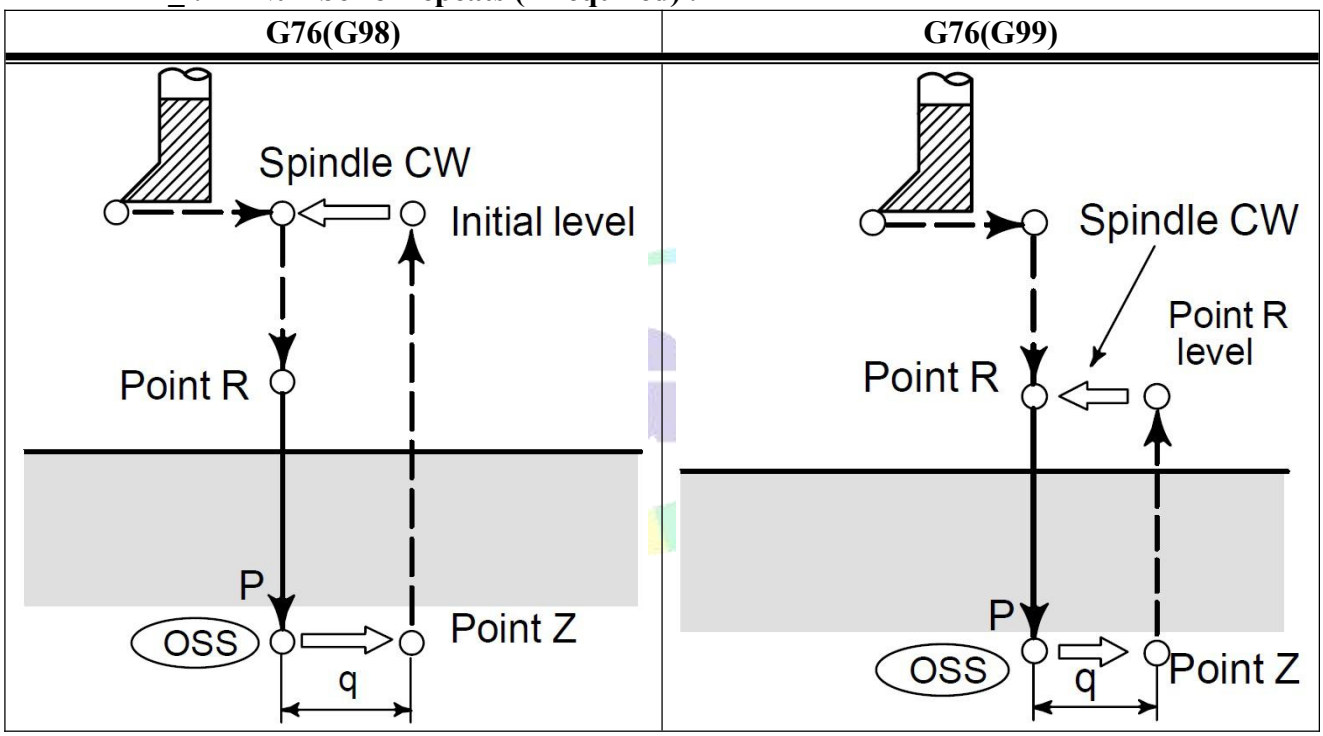

Warning: Q(shift at the bottom of a hole) is a modal value retained within canned cycles. It must be specified carefully because it is also used as the depth of cut for G73 and G83.

Direction of shift after oriented spindle stop is set by P3 in User parameter.

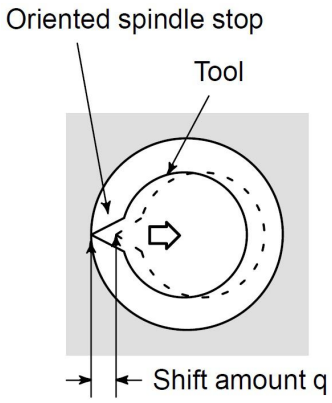

Fig3.22.3 Shift amount & direction

When the bottom of the hole has been reached,the spindle is stopped at the fixed rotation position, and the tool is moved in the direction opposite to the tool tip and retracted. This ensures that the machined surface is not damaged and enable precise and efficient boring to be performed.

Before specifying G76, use a miscellaneous function (M code) to rotate the spindle. When The G76 command and an M code are specified in the same block, the M code is executed at the time of the first positioning operation. The system then proceeds to the next operation.

When a tool length offset (G43, G44, or G49) is specified in the canned cycle, the offset is applied at the time of positioning to point R..

Note: 1. Before the drilling axis can be changed, the canned cycle must be canceled.

2. In a block that does not contain R, Q , boring is not performed.

3. Be sure to specify a positive value in Q. If Q is specified with a neative value, the sign is ignored. Set the direction of shift is set by P3 of User parameter. Specify P & Q in a block that performas boring. If they are specified in a block that doesnot perform boring, they cannot be stored as modal data.

4. Do not specify a G code of the 01 group(G00-G03) and G76 in a single block. Otherwise, G76 will be canceled and alarm.

5. In the canned cycle mode, tool offsets are ignored.

Warning: The spindle system must support orientation function when use G76. SZGH cnc system output M61(Pin19_CN10 plug) for orentation, M22(Pin5_CN10 plug) detects orientation end.

Example:

N10 M3 S500 ; Cause the spindle to start rotating.

N20 G90 G99 G75 X300 Y-250 Z-150 R-100 Q5 P1 F120;

Position, bore hole 1, then return to point R. Orient at the bottom of the hole, then shift by 5mm.Stop at the bottom of the hole for 1s.

N30 Y-350 ; Position, drill hole 2, then return to point R.

N40 Y-550 ; Position, drill hole 2, then return to point R.

N50 X1000 ; Position, drill hole 2, then return to point R.

N60 Y-550 ; Position, drill hole 2, then return to point R.

N70 G98 Y-750 ; Position, drill hole 2, then return to the initial level.

N80 G80 G28 G91 X0 Y0 Z0 ; Return to the reference position

N90 M5 ; Cause the spindle to stop rotating.

3.28.4 Canned Cycle Cancel (G80)

G80 cancels canned cycle.

Format: G80 ;

All canned cycleare canceled to perform normal operation. Point R and point Z are cleared. This means that R=0 and Z=0 in incremental mode. Other drilling data is also canceled(cleared).

3.28.5 Drilling cycle, Spot Drilling (G81)

This cycle is used for normal drilling, Cutting feed is performed to bottom of the hole. Then the tool retracted from the bottom of the hole in rapid traverse.

Format: G81 X_ Y_ Z_ R_ F_ L_ ;

X_Y_ : Hole position data
Z_ : The distance from point R to bottom of the hole
R_ : The distance from initial level to point R level
F_ : Cutting feedrate
L_ : Number of repeats (if required)

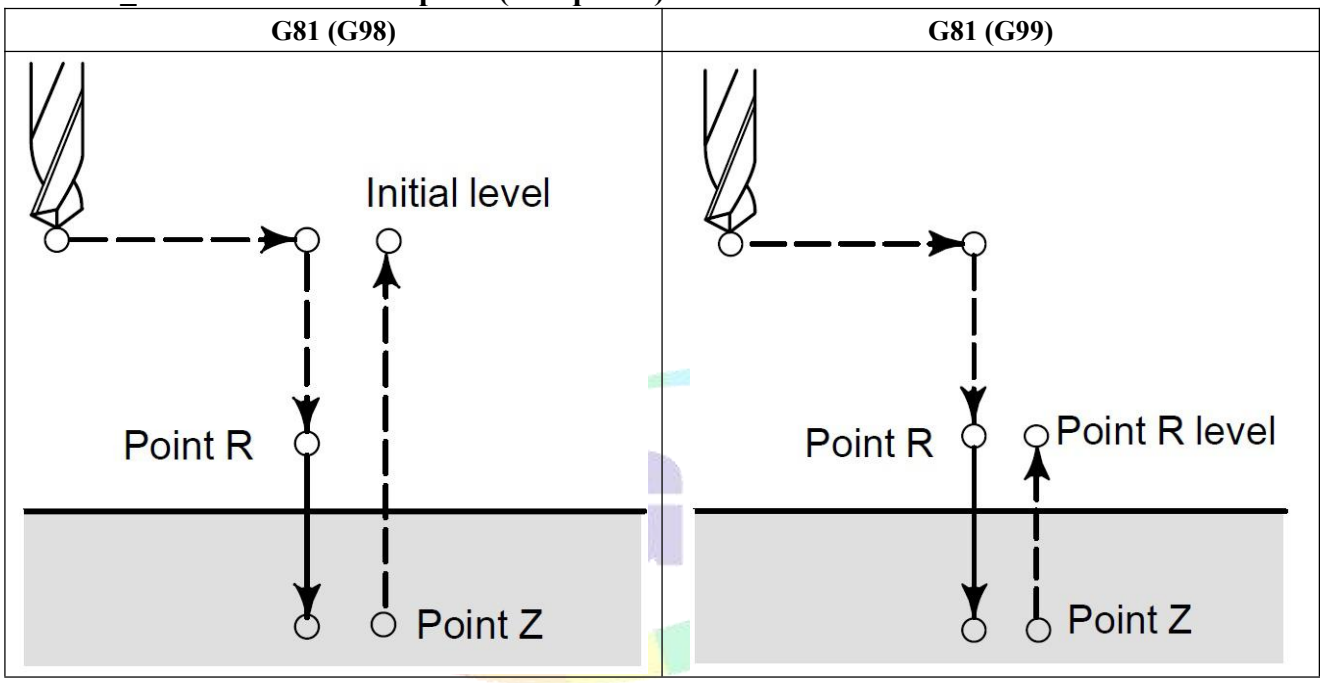

After positioning along the X axis and Y axis, rapid traverse is performed to point R. Drilling is performed from point R to point Z. Then the tool is retracted in rapid traverse.

Before specifying G81, use miscellaneous function (M code) to rotate the spindle. When the G81 command and an M code are specified in the same block, the M code is executed at the time of the first positioning operation. The system then proceeds to the next drilling operation.

When a tool length offset (G43, G44 or G49) is specified in the canned cycle, the offset is applied at the time of position to point R.

Note: In the canned cycle mode, tool offsets are ignored.

Example:

```
M3 S2000 ;                    Cause the spindle to start rotating
G90 G99 G81 X300 Y-250 Z-150 R-100 F120    ;
                              Position, drill hole 1, then return to point R.
Y-550 ;                       Position, drill hole 2, then return to point R.
Y-750 ;                       Position, drill hole 3, then return to point R.
X1000 ;                       Position, drill hole 4, then return to point R.
G98 Y-750 ;                   Position, drill hole 5, then return to the initial level.
G80 G28 G91 X0 Y0 Z0 ;        Return to the reference position
M5 ;                          Cause the spindle to stop rotating
```

3.28.6 Drilling Cycle Counter Boring Cycle (G82)

This cycle is used for normal drilling.Cutting feed is performed to the bottom of the hole. At the bottom, a dwell is performed, then the tool is retracted in rapid traverse. This cycle is used to drill holes more accurately with respect to depth.

Format: G82 X_ Y_ Z_ R_ P_ F_ L_ ;

X_ Y_ : Hole position data
Z_ : The distance from R point to bottom of the hole
R_ : The distance from initial level to point R level
P_ : Dwell time at the bottom of a hole. Unit: s.
F_ : Cutting feed rate
L_ : Number of repeats (if required)

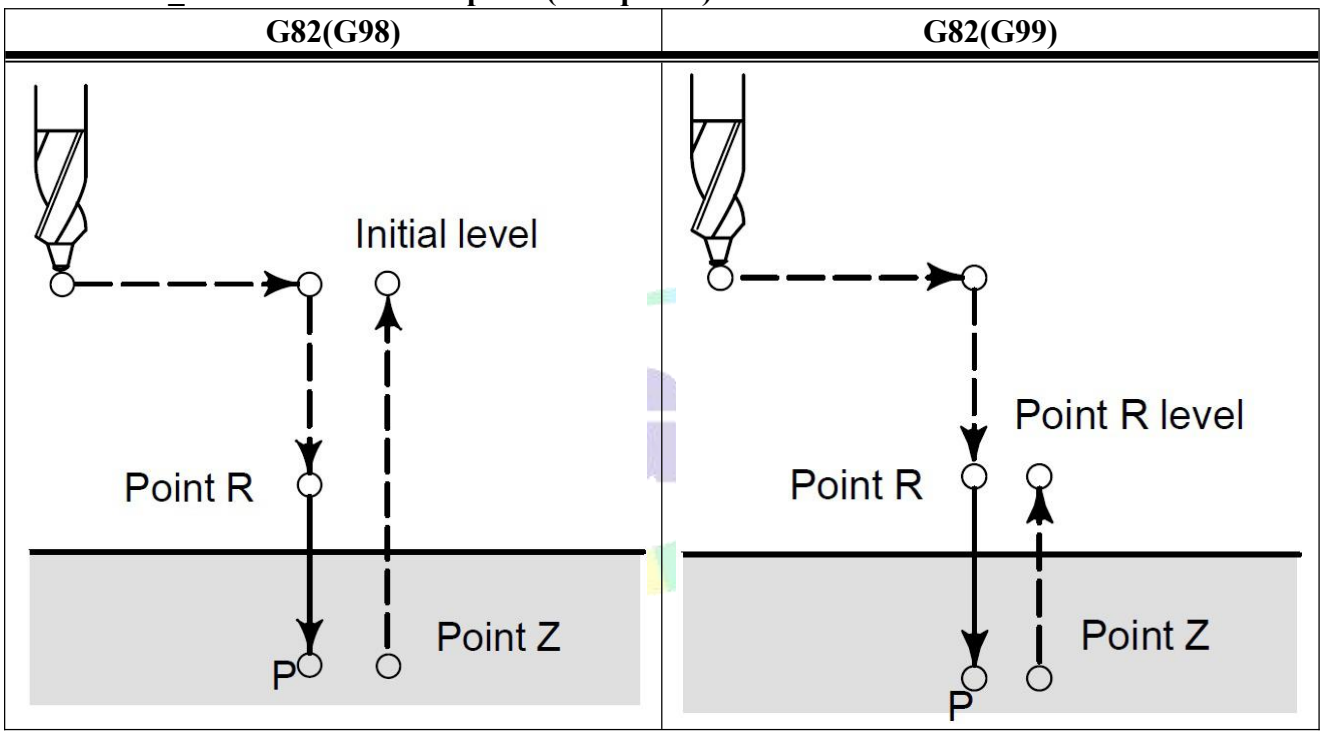

After positioning along the X and Y axis, rapid traverse is performed to point R. Then drilling is performed from point R to point Z, When the bottom of the hole has been reached, a dwell is performed. Then the tool is retracted in rapid traverse.

Before specifying G82, use miscellaneous function (M code) to rotate the spindle. When the G82 command and an M code are specified in the same block, the M code is executed at the time of the first positioning operation. The system then proceeds to the next drilling operation.

When a tool length offset (G43, G44 or G49) is specified in the canned cycle, the offset is applied at the time of position to point R. In the canned cycle mode, tool offsets are ignored.

Example: M3 S2000 ; Cause the spindle to start rotating
G90 G99 G82 X300. Y-250. Z-150. R-100. P1 F120. ;
Position, drill hole 1, and dwell for 1s at the bottom of the hole, then return to point R.
Y-550. ; Position, drill hole 2, then return to point R.
G98 Y-750. ; Position, drilling hole 3, then return to initial level.
G0 X0 Y0 Z0 ; Return to the zero point.
M05 ; Cause the spindle to stop rotating.

3.28.7 Peck Drilling Cycle (G83)

This cycle performs peck drilling. It performs intermittent cutting feed to the bottom of a hole while removing shavings from the hole.

Format: G83 X_ Y_ Z_ R_ Q_ F_ L_ ;

X_ Y_ : Hole position data

Z_ : The distance from point R to the bottom of the hole

R_ : The distance from initial level to point R level

Q_ : Depth of cut for each cutting feed

F_ : Cutting speed

L_ : Number of repeats

G83 (G98)	G83 (G99)
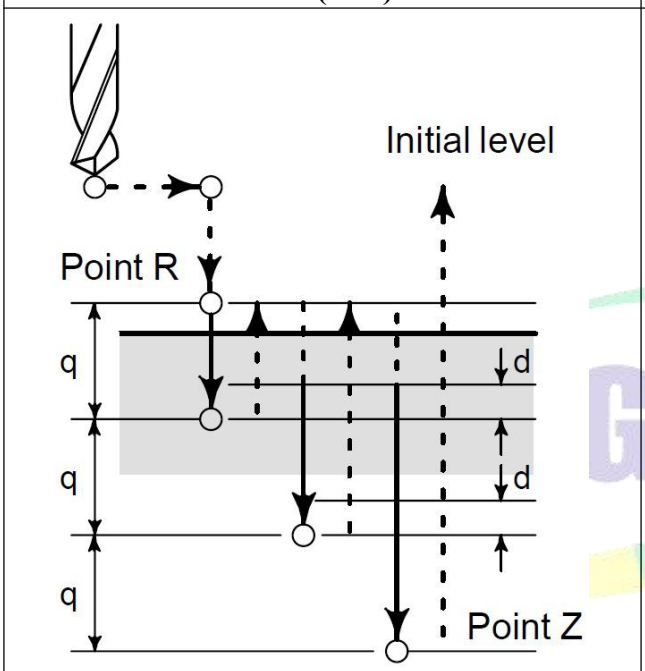	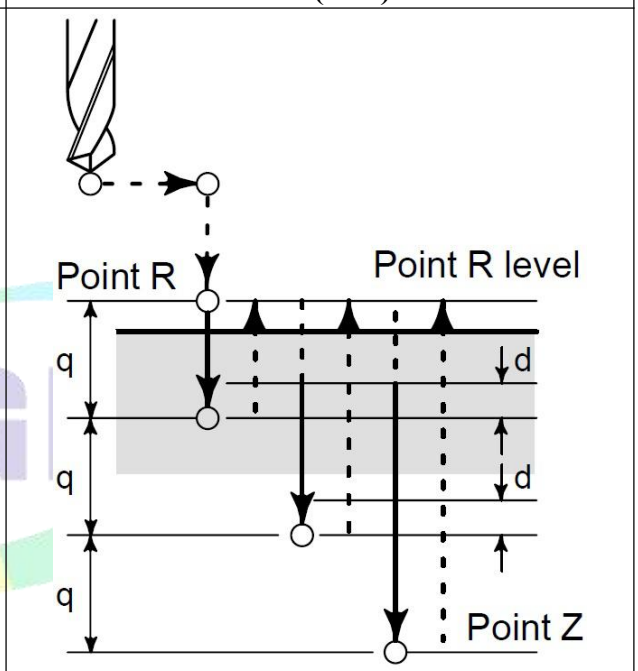

Q represents the depth of each cutting feed. It must be specified in an incremental value. In the second and subsequent cutting feed, rapid traverse is performed up to a d point just before where the last drilling ended, and cutting feed is performed again. d is set by P2 in User parameter.

Be sure to sepcify a positive value in Q. Negative values are ignored.

Before specifying G83, use miscellaneous function (M code) to rotate the spindle. When the G83 command and an M code are specified in the same block, the M code is executed at the time of the first positioning operation. The system then proceeds to the next drilling operation.

When a tool length offset (G43, G44 or G49) is specified in the canned cycle, the offset is applied at the time of position to point R. In the canned cycle mode, tool offsets are ignored.

Example: M3 S2000 ; Cause the spindle to start rotating.

G90 G99 G83 X300. Y-250. Z-150. R-100. Q15. F120. ;

Position, drill hole 1, then return to point R.

Y-550.; Position, drill hole 1, then return to point R.

G98 Y-750.; Position, drill hole 1, then return to the initial level.

G80; Cancel canned cycle

M05; Cause the spindle to stop rotating.

3.28.8 Right-handed Peck Rigid Tapping Cycle (G84)

Tapping a deep hole in rigid tapping mode may be difficult due to chips sticking to the tool or increased cutting resistance. In such cases, the peck rigid tapping cycle is useful.

This cycle may be performed in standard mode or rigid tapping mode.

In stardard mode, the spindle is rotated and stopped along with a movement along the tapping axis using miscellaneous functions M03 (Rotating the spindle clockwise), M04 (rotating the spindle counterclockwise), and M05 (Stopping the spindle) to perform tapping following with SP-Encoder.

In Rigid tapping mode, tapping is performed by controlling the spindle motor as if it were a servo motor and by interpolation between the tapping axis and spindle. When tapping is performed in rigid mode, the spindle rotates one turn every time a certai feed(thread lead) which taks place along the tapping axis. This operation doe not vary even during acceleration or deceleration.

In this cycle, cutting is performed serveral times until the bottom of the hole is reached.

Format: G84 X_ Y_ Z_ R_ P_ Q_ K_ L_ S_ ;

X_ Y_ : Hole position data
Z_ : The distance from point R to the bottom of the hole
R_ : The distance from the initial level to point R level
P_ : Dwell time at the bottom of the hole and at point R. Unit s.
Q_ : Depth of cut for each cutting feed
K_ : Pitch of Screw
S_ : Speed of Spindle
L_ : Number of repeats

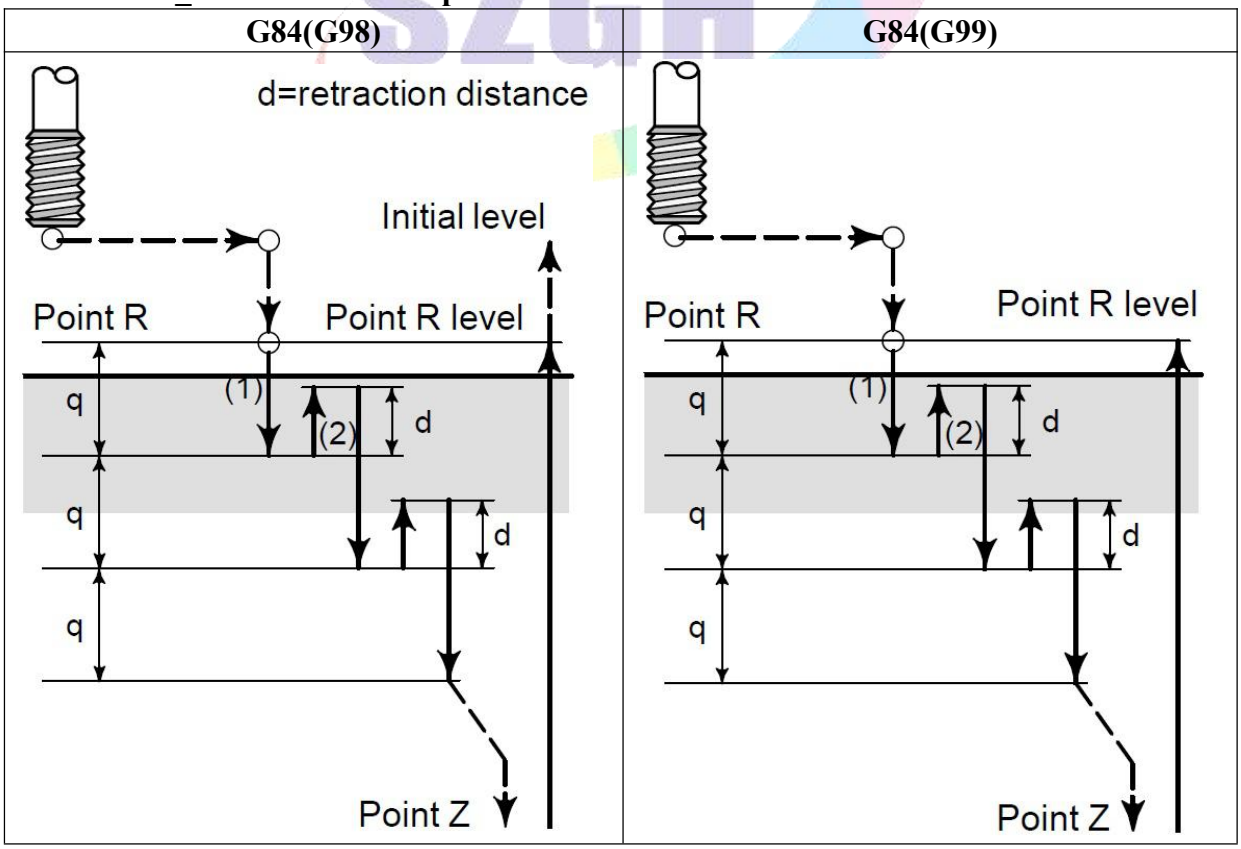

After positioning anlog X and Y axis,rapid traverse is performed to point R. From point R, cutting is performed with depth Q (depth of each cutting feed), then the tool is retracted by distance

d. When point Z has been reached, after dwell time P, the spindle is stopped, then rotated in the counter-clockwise direction(CCW) for retraction.

Set the retraction distance, d, P7 in User parameter

Set the retraction mode, P6 in User parameter. 0: Retract with d in rapid traverse, 1: Retract to point R level.

During rigid tapping,Speed of feeding axes is set by SP_Speed(S) & threading pitch .

Note: 1. Do not specify a G code of the 01 group(G00-G03) and G84 in a single block. Otherwise, G84 will be canceled and alarm.

2. In a block that does not contain K , rigid tapping is not performed and cannot pass compile.

3. In the canned cycle mode, tool offsets are ignored.

4. Before the drilling axis can be changed, the canned cycle must be canceled. If the drilling axis is changed in rigid mode, cnc system will alarm.

5. During rigid tapping, Spindle-feedrate override and Feed-feedrate override don't work.

Parameters Sets for Rigid Tapping:

1, Standard tapping, following Spinlde_Encoder mode, P411=2 in Axis parameter, CNC system must be configured with SP-encoder

Special Note: When the transmission ratio between Spindle and Encoder is not 1:1, it must be configured with SZGH Transfer Board & modify P412 & P413 in Axis parameter;

412, Number of spindle teeth

413, Number of encoder teeth

2, Rigid tapping, interpolation between Spindle & Drilling axis, P405=5, P410=94, P411=3 in Axis parameter..

M75: Shift control mode of spindle to Positon Control Mode(Pulse+Direction). After rigid tapping, M74, cancel position control mode of spindle.

Rigid mode eliminates the need to use a floating tap required in the standard tapping mode, thus allowing faster and more precise tapping.

Example:

```
M3 S100 ;            Cause the spindle to start rotating
G90 G99 G84 X300 Y-250 Z-150 R-120 P300 K5 S100 ;
                     Position, tapping hole 1, then return to point R
Y-550. K5;           Position, tapping hole 2, then return to point R
G98 Y-750. K5;       Position, tapping hole 1, then return to the initial level
G80 ;                Cancel rigid tapping cycle
M30;                 End of program
```

3.28.9 Boring Cycle (G85)

This cycle is used to bore a hole.

Format: G85 X_ Y_ Z_ R_ F_ L_ ;

X_ Y_: Hole position data

Z_ : The distance from point R to the bottom of the hole

R_ : The distance from the initial level to point R level

F_ : Cutting feedrate

L_ : Number of repeats

G85 (G98)	G85 (G99)
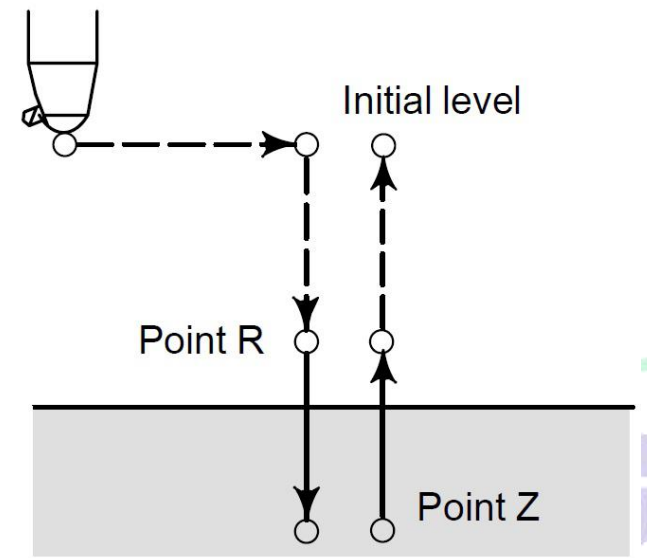	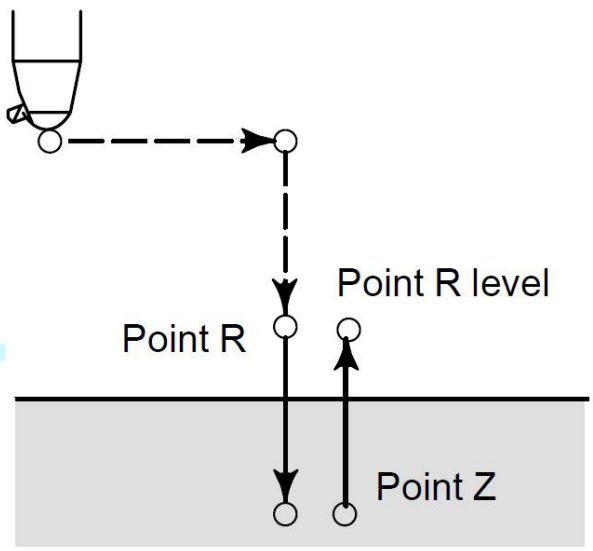

After positioning along the X and Y axis, rapid traverse is performed to point R. Drilling is performed from point R to point Z. When point Z has been reached, cutting feed is performed to return to point R.

Before specifying G85, use miscellaneous function (M code) to rotate the spindle. When the G85 command and an M code are specified in the same block, the M code is executed at the time of the first positioning operation. The system then proceeds to the next boring operation.

When a tool length offset (G43, G44 or G49) is specified in the canned cycle, the offset is applied at the time of position to point R. In the canned cycle mode, tool offsets are ignored.

Note: 1. Before the drilling axis can be changed, the canned cycle must be canceled.

2. Do not specify a G code of the 01 group(G00-G03) and G85 in a single block.Otherwise, G85 will be canceled and alarm.

Example: M3 S100 ; Cause the spindle to start rotating

```
G90 G99 G85 X300. Y-250. Z-150. R-120. F120.
                Position, drill hole 1, then return to point R
Y-550 ;         Position, drill hole 2, then return to point R
Y-750;          Position, drill hole 3, then return to point R
X1000 ;         Position, drill hole 4, then return to point R
G98 Y-750 ;     Position, drill hole 5, then return to initial level
G80 ;           Cancel canned cycle
M05 ;           Cause the spindle to stop rotating.
```

3.28.10 Boring Cycle (G86)

This cycle is used to bore a hole.

Format: G86 X_ Y_ Z_ R_ F_ L_ ;

X_ Y_: Hole position data

Z_ : The distance from point R to the bottom of the hole

R_ : The distance from the initial level to point R level

F_ : Cutting feedrate

L_ : Number of repeats

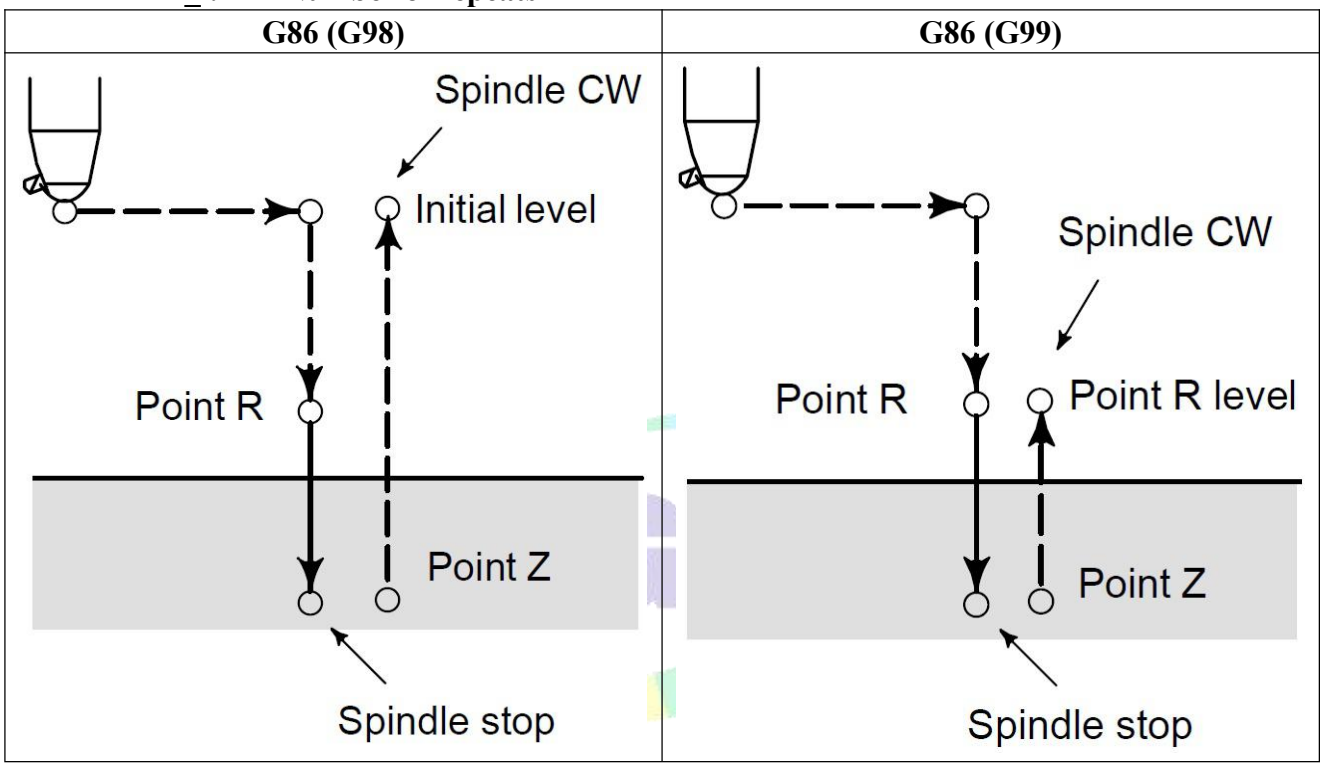

After positioning along the X and Y axis, rapid traverse is performed to point R. Drilling is performed from point R to point Z. When the spindle is stopped at the bottom of the hole, the tool is retracted in rapid traverse.

Before specifying G86, use miscellaneous function (M code) to rotate the spindle. When the G86 command and an M code are specified in the same block, the M code is executed at the time of the first positioning operation. The system then proceeds to the next boring operation.

When a tool length offset (G43, G44 or G49) is specified in the canned cycle, the offset is applied at the time of position to point R. In the canned cycle mode, tool offsets are ignored.

Note: 1. Before the drilling axis can be changed, the canned cycle must be canceled.

2. Do not specify a G code of the 01 group(G00-G03) and G86 in a single block.Otherwise, G86 will be canceled and alarm.

Example: M3 S2000 ; Cause the spindle to start rotating

G90 G99 G85 X300. Y-250. Z-150. R-120. F120. Position, drill hole 1, then return to point R

Y-550 ; Position, drill hole 2, then return to point R

G98 Y-750 ; Position, drill hole 3, then return to initial level

G80 ; Cancel canned cycle

M05 ; Cause the spindle to stop rotating.

3.28.11 Back Boring Cycle (G87)

This cycle performs accurate boring.When the bottom of the hole has been reached, the spindle stops, and the tool is moved alway from the machined surface of the workpiece and retracted with the direction that set by P4 in User parameter.

Format: G87 X_ Y_ Z_ R_ Q_ P_ F_ L_ ;

X_ Y_: Hole position data
Z_ : The distance from point R to the bottom of the hole
R_ : The distance from the initial level to point R(the bottom of the hole) level
Q_ : Tool shift amount
P_ : Dwell time
F_ : Cutting feedrate
L_ : Number of repeats

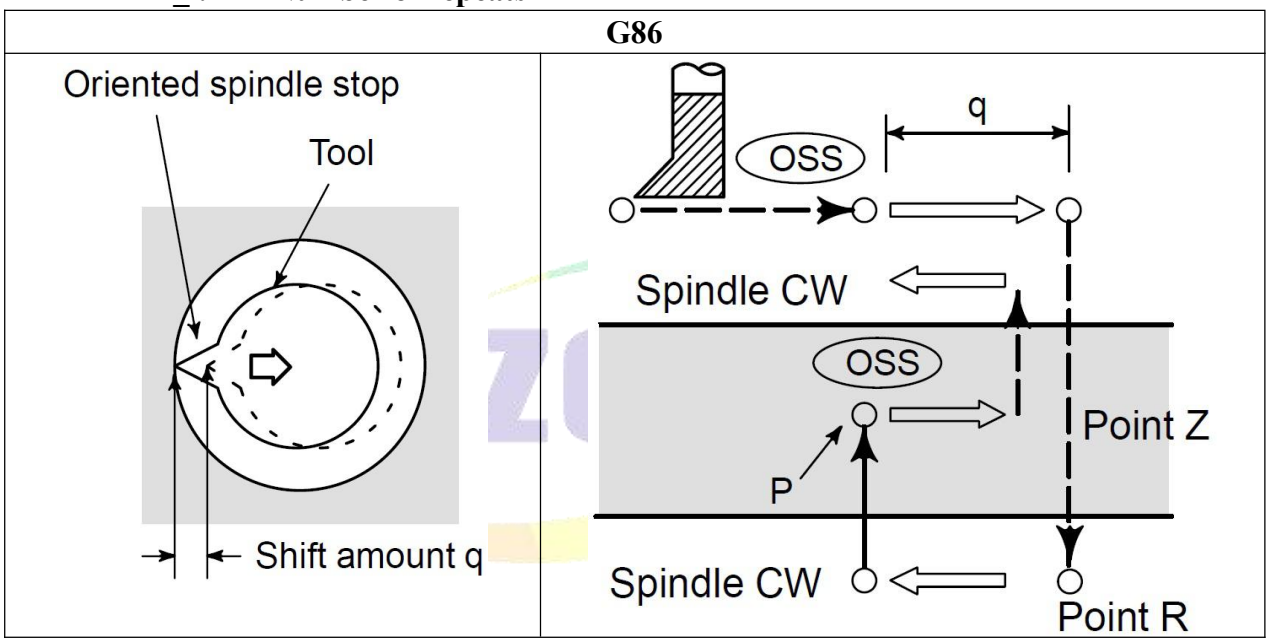

Warning: Q(shift at the bottom of a hole) is a modal value retained within canned cycles. It must be specified carefully because it is also used as the depth of cut for G73 and G83.

After positioning along the X and Y axis,the spindle is stopped at the fixed rotation position (Spindle orientation). The tool is moved in the direction(this direction is set by P4 & P5 in User parameter), opposite to the tool tip, positioning (rapid traverse) is performed to the bottom of the hole (point R). Then the tool is shifted in the direction of the tool tip and the spindle is rotated clockwise. Boring is performed in the positive direction along the Z-axis until point Z is reached. At point Z, the spindle is stopped at the fixed rotation position again(Spindle orientation), the tool is shifted in the direction opposite to the tool tip, then the tool is returned to the intial level. Then the tool is shifted in the direction of the tool tip and the spindle is rotated clockwise to proceed to the next block operation.

Before specifying G87, use miscellaneous function (M code) to rotate the spindle. When the G87 command and an M code are specified in the same block, the M code is executed at the time of the first positioning operation. The system then proceeds to the next boring operation.

When a tool length offset (G43, G44 or G49) is specified in the canned cycle, the offset is applied at the time of position to point R.

Note: 1. Before the drilling axis can be changed, the canned cycle must be canceled.

2. In a block that does not contain R, Q , boring is not performed.

3. Be sure to specify a positive value in Q. If Q is specified with a neative value, the sign is ignored. Set the direction of shift is set by P4 & P5 of User parameter. Specify P & Q in a block that performas boring. If they are specified in a block that doesnot perform boring, they cannot be stored as modal data.

4. Do not specify a G code of the 01 group(G00-G03) and G87 in a single block. Otherwise, G87 will be canceled and alarm.

5. In the canned cycle mode, tool offsets are ignored.

Warning: The spindle system must support orientation function when use G87. SZGH cnc system output M61(Pin19_CN10 plug) for orentation, M22(Pin5_CN10 plug) detects orientation end.

Example:

N10 M3 S500 ; Cause the spindle to start rotating.

N20 G90 G87 X300 Y-250 Z-150 R-100 Q5 P1 F120;

Position, bore hole 1. Orient at the initial level, then shift by 5mm.Stop at point Z for 1s.

N30 Y-350 ; Position, drill hole 2.

N40 Y-550 ; Position, drill hole 3.

N50 X1000 ; Position, drill hole 4.

N60 Y-550 ; Position, drill hole 5.

N70 G98 Y-750 ; Position, drill hole 6.

N80 G80 G28 G91 X0 Y0 Z0 ; Return to the reference position

N90 M5 ; Cause the spindle to stop rotating.

3.28.12 Boring Cycle (G89)

This cycle is used to bore a hole.

Format: G89 X_ Y_ Z_ R_ P_ F_ L_ ;

X_ Y_: Hole position data

Z_ : The distance from point R to the bottom of the hole

R_ : The distance from the initial level to point R level

P_ : Dwell time at the bottom of a hole

F_ : Cutting feedrate

L_ : Number of repeats

G86 (G98)	G86 (G99)
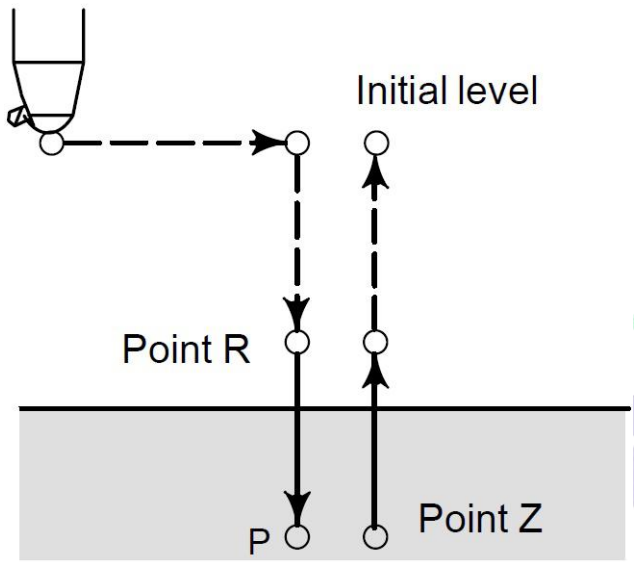	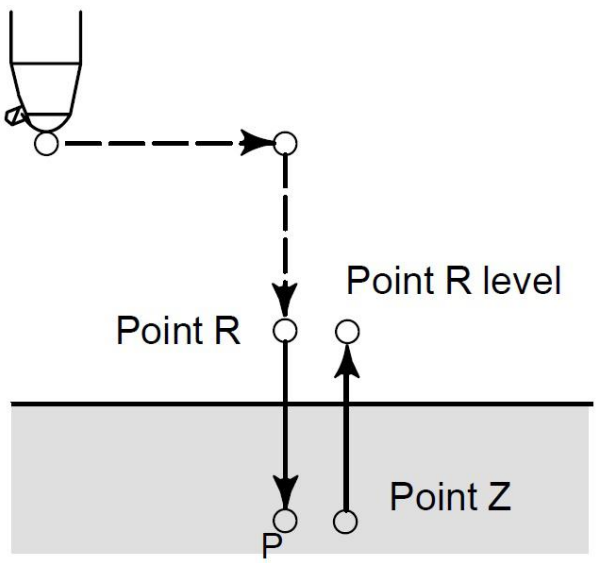

This cycle is almost same to G85. The difference is that this cycle performs a dwell at the bottom of the hole.

Before specifying G89, use miscellaneous function (M code) to rotate the spindle. When the G89 command and an M code are specified in the same block, the M code is executed at the time of the first positioning operation. The system then proceeds to the next boring operation.

When a tool length offset (G43, G44 or G49) is specified in the canned cycle, the offset is applied at the time of position to point R. In the canned cycle mode, tool offsets are ignored.

Note: 1. Before the drilling axis can be changed, the canned cycle must be canceled.

2. Do not specify a G code of the 01 group(G00-G03) and G86 in a single block.Otherwise, G86 will be canceled and alarm.

Example: M3 S100 ; Cause the spindle to start rotating

G90 G99 G89 X300. Y-250. Z-150. R-120. P1 F120. ;

Position, drill hole 1, then return to point R

Then stop at the bottom of the hole for 1s.

Y-550 ; Position, drill hole 2, then return to point R

X1000 ; Position, drill hole 3, then return to point R.

G98 Y-750 ; Position, drill hole 5, then return to initial level.

G80 G28 G91 X0 Y0 Z0 ; Return to the reference position

M05 ; Cause the spindle to stop rotating.

3.28.13 Example of Canned Cycle

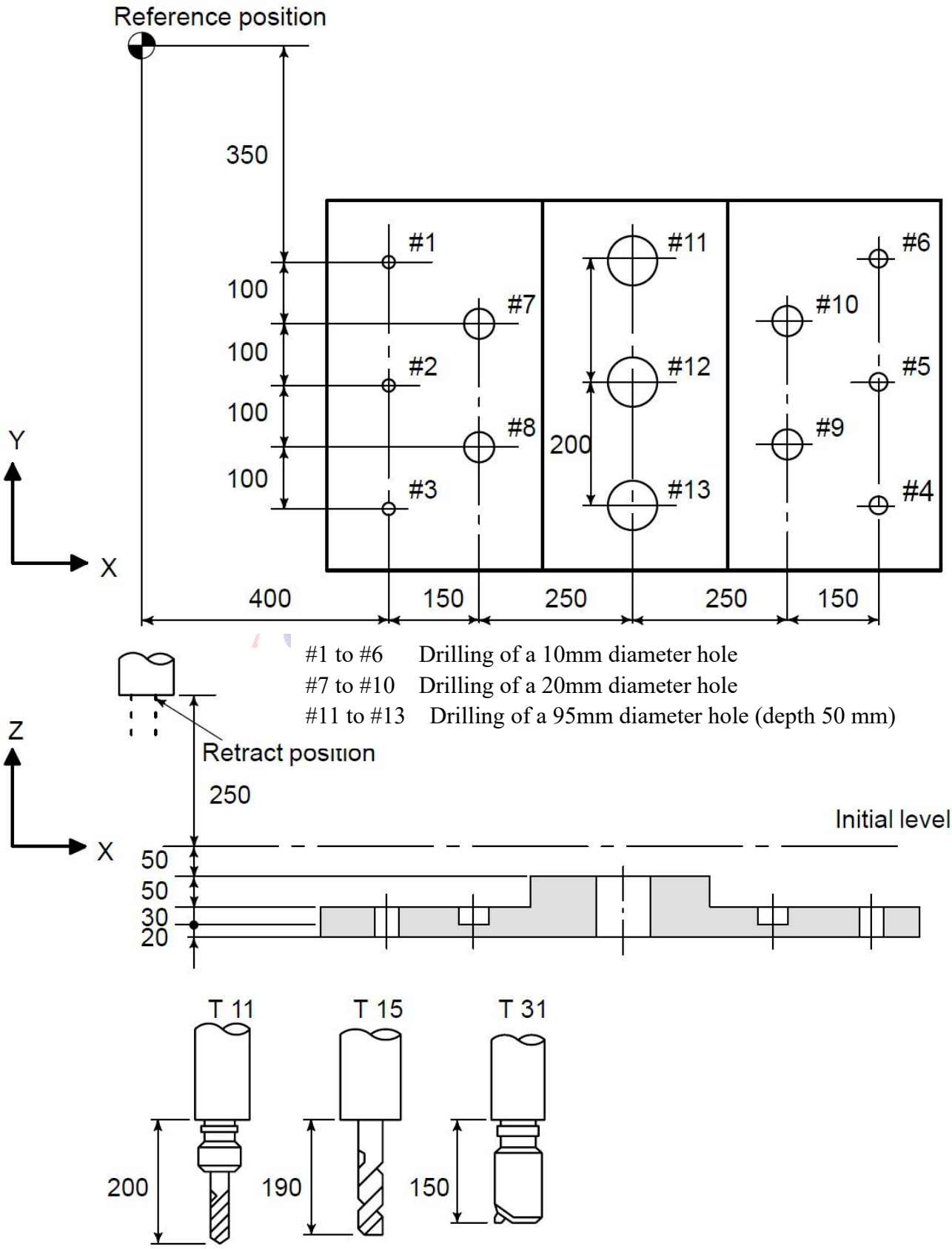

Fig3.22.13 Example of Canned Cycle

Prarameter Set: In Redeem, Length offset value: +200.0 is set in No.11 ; +190 is set in No.15 ; and +150 is set in No.31.

Program Example:

```
N1   G54 X0 Y0 Z0 ;                 Coordinate setting at reference position
N2   G90 G00 Z250.0 T11;            Tool change
N3   G43 Z0 H11 ;                   Initial level, tool length offset
N4   S30 M3 ;                       Start spindle CW
N5   G99 G81 X400.0 Y-350.0 Z-153.0 R-97.0 F120 ;
                                    Positioning, then drilling hole #1
N6   Y-550.0 ;                      Positioning, then drilling hole #2, return to point R level
N7   G98 Y-750.0 ;                  Positioning, then drilling hole #3, return to intial level
N8   G99 X1200.0 ;                  Positioning, then drilling hole #4, return to point R level
N9   Y-550.0 ;                      Positioning, then drilling hole #5, return to point R level
N10  G98 Y-350.0 ;                  Positioning, then drilling hole #6, return to initial level
N11  G00 X0 Y0 M5 ;                 Positioning, then drilling hole #7, return to point R level
N12  G49 Z250.0 T15 ;               Tool length offset cancel, tool change
N13  G43 Z0 H15 ;                   Initial level, tool length offset
N14  S20 M3 ;                       Start spindle CW
N15  G99 G82 X550.0 Y-450.0 Z-130.0 R-97.0 P1 F50 ;
                                    Positioning, then drilling hole #7, return to point R level
N16  G98 Y-650.0 ;                  Positioning, then drilling hole #8, return to initial level
N17  G99 X1050.0 ;                  Positioning, then drilling hole #9, return to point R level
N18  G98 Y-450.0 ;                  Positioning, then drilling hole #10, return to initial level
N19  G00 X0 Y0 M5 ;                 Return to reference position & Stop spindle
N20  G49 Z250.0 T31 ;               Tool length offset cancel, tool change
N21  G43 Z0 H31 ;                   Initial level, tool length offset
N22  S10 M3 ;                       Start spindle CW
N23  G85 G99 X800.0 Y-350.0 Z-153.0 R47.0 F150 ;
                                    Positioning, then drilling hole #11, return to point R level
N24  G91 Y-200.0 ;                  Positioning, then drilling hole #12, return to point R level
N25  Y-200.0 ;                      Positioning, then drilling hole #13, return to point R level
N26  G90 G28 X0 Y0 M5 ;             Return to reference position & Stop spindle
N27  G49 Z0 G80 ;                   Tool length offset cancel
N28  M02 ;                          Program Stop
```

3.29 Block Cycle (G22,G800)

G22 is a program loop instruction, G800 is the end of the cycle instruction. Both must be paired for parts machining process requires repeated occasions. L is the number of cycles, ranging from 1-99999. Cycle instructions can be nested.

Format:

G22 L_

. } **Block Cycle**

. }

. }

G800 ;End

For example

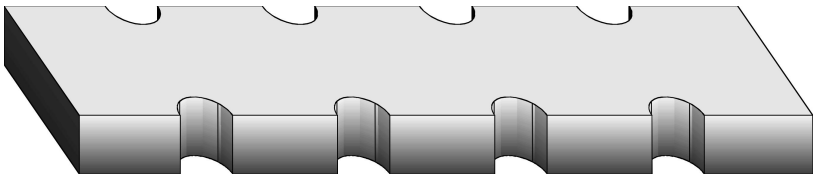

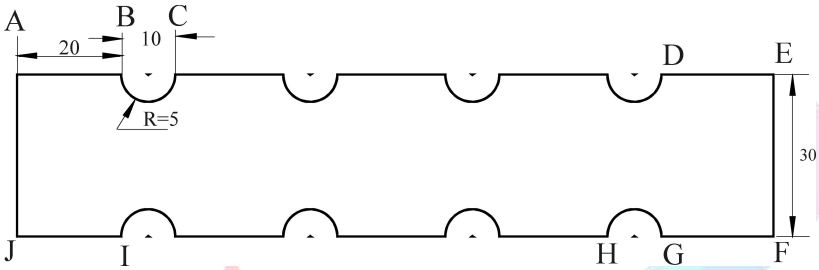

Program as follows:

```
N0000 G17 G90 X0 Y0 F250 M03     ;
N0001 G91 G01 Z-10
N0010 G22 L4                     ;
N0020 G01 X20                    ;
N0030 G03 X10 I5 J0 Y0           ;
N0040 G800                       ;
N0050 G01 X20                    ;D-E line
N0060 Y-30                       ;E-F line
N0070 G11 X140 Y-30              ;set mirror
N0080 G22 L4                     ;circulation begin
N0090 G01 X20                    ;F-G line
N0100 G03 X10 I5                 ;G-H arc
N0110 G800                       ;circulation end
N0120 G01 X20                    ;I-J line
N0130 G01 Y-30                   ;cancel mirror
N0140 G12                        ;J-A line
N0150 G26                        ;go back to program begin point
N0160 M02                        ;over
```

3.30 Macro program instruction(G65/G66/G67)

3.30.1 Non-Mode Macro Command G65

Format: G65 P_ L_ A_ B_ C_ .....

Non-mode macro command G65 only work at current line , which is different to mode macro command(G66),which always work until macro cancel command(G67)

P_ : Specify name of macro program, E.g: P6000 , name of specified macro program is 6000 .

L_: Set times of call macro program

<A_B_C_... ...> : Argument , which is used for transfer data to macro varible(#**) , Transfering table is as following

Argument	Variable	Argument	Variable	Argument	Variable
A	#0	I	#7	T	#14
B	#1	J	#8	U	#15
C	#2	K	#9	V	#16
D	#3	M	#10	W	#17
E	#4	Q	#11	K	#18
F	#5	R	#12	Y	#19
H	#6	S	#13	Z	#20

Waraning:

1. Macro variables #100-#155&#190-#201 was occupied by system, user cannot use.

2. User cannot use G70,G71,G72,G73,G92,G76 etc loop command on Macro program.

Note: the address G, L, N, Q, P can't be used as user-defined variables.

Example:

Main program:9000	Macro program:8000
G00 X0 Z0 G65 P8000 L1 A5 B6 G0 X0 Z0 M30	N1 #2=#0+#1 N2 IF （#2 EQ 10）GOTO 4 N3 GOO X#2 N4 G00 Z#1 N5 M99 ;Return

3.30.2 Mode Macro Command G66/G67

G66 is mode macro command , G67 is cancel mode macro command

Format: G66 P_ L_ A_ B_ C_ .....
G67

G66 Mode macro command,which always call macro program until macro cancel command(G67)

P_ : Specify name of macro program, E.g: P7000 , name of specified macro program is 7000 .

L_: Set times of call macro program

<A_B_C_... ...> : Argument , which is used for transfer data to macro varible(#**) , the transfering table is same as above table.

Example:

Main Program : 4000
G00 X0 Z0
G66 P6000 L2 A5 B6

```
A8 B1
A9 B10
G67
M30
Macro Program: 6000
N1 #2=#0+#1
N2 IF (#2 EQ 10) GOTO 4
N3 G00 X#2
N4 G00 Z#1
N5 M99              ; Return
```

3.30.3 Macro Program Instruction

3.30.3.1 Input Instruction: WAT

Waiting for the input port X valid or invalid instruction

Format: WAT+ (-) X

Attention: "+" to means the input is effective;

"-" means the input is invalid;

"X" means the input port X00-X55; see the I/O diagnosis;

3.30.3.2 Output Instruction: OUT

Set the output port Y is valid or invalid instruction

Format: OUT +(-)Y

Attention: "+" means the output is effective;

"-" means the output is invalid;

"Y" means the output port Y00-Y31; see the I/O diagnosis;

3.30.3.3 Assignment Instruction: =

Explanation: used for assignment of a variable

Eg.: #251=890.34 #450=#123

And also it could be mathematical expression , eg.: #440=#234+#470

3.30.3.4 Unconditional Jump: GOTO n

"GOTO n" is the command that for jump to the program line that is specified by sequence number (N**) unconditionally. n is the sequence number.

E.g.: GOTO 5 ; // Jump to N5 program line.

Note: when specified program line , n , is beyond sequence number of N1-N99999, cnc system will hint error.

n , program line,could be macro variable (#**)

E.g.: GOTO #100

3.30.3.5 Conditional Jump

1) IF (Conditional express) GOTO n

If condition is met, execute GOTO n ,jump to N** program line; if the condition isnot met, execute the next segment.

Example:
```
N1 IF(#200 EQ 1) GOTO 20
N10 G00 X0
N20 G00 Z0
```

Explanation: If #200 is equal to 1, system will execute GOTO 20 , jump to N20 , and execute "G00 Z0", if #200 isn't equal to 1, system don't execute operation of "GOTO 20" ,and will

execute next segments , “G00 X0”,and then execute “G00 Z0”.

2) IF (Conditional express) THEN <A Expression>
<B opertional segment>

If condition is met, system execute A expression , and then execute B operational segment ; if condition is not meet, execute the next segment , B operation.

Example: #101=0
N1 IF(#100 EQ 1) THEN #101=1
N2 IF(#101 EQ 1) GOTO 4
N3 G00 X100
N4 G00 Z100

Explanation: If #100 is equal to 1, system will execute “#100=1”, and then judge #101 is equal to 1 , jump to N4 & “execute G00 Z100” ; if #100 isn’t equal to 1, system will judge #101 also isn’t equal to 1 directly , and execute “G00 X100” & “G00 Z100”.

NOTE: 1.<A expression> normally is assignment statement.
2. <A expression> after THEN must exist, otherwise system will hint grammatical errors.

Prolongation:

3) IF(conditional express)
<A operational command>
ELSE
<B operational command>
ENDIF
4) IF(conditional express)
<A operational command>
ELIF
<B operational command>
ENDIF

3.30.3.6 Loop Command

Format: (Conditions Initialization)
WHILE (conditional expression) DO n
<A operational segments>
[Alter condition of loop]
END n
<B operational segments>

When conditions are met during WHILE cycle command, execute the operational segments between DO n and END n . Otherwise,when condition isnot met, jump to the program line after END n ,also execute B operational segments.

We can nest for loops by placing one loop within another.

Note: 1.There must have operational codes that are for change condition at operational segments ,which is between Do n & END n. Otherwise system will enter endless loop.
2.Nesting of macro program loop statements of SZGH CNC system is 3 pcs of loops at most . Also n only could be 1 , 2 , 3 .
3.n of “DO n” & “END n” must keep same.

Example: #100=2 #150=5 #200=25

```
WHILE （#100 LT 3）DO 1
 G00 X100
 WHILE （#150 EQ 5）DO 2
 G00 Y100
 WHILE （#200 GE 20）DO 3
 G00 Z100
 #200=#200-2
 END 3
 #150=#150-1
 END 2
 #100=#100-1
 END 1
```

3.30.4 Operators' meaning

Operator	Sign	Ex.	Operator	Sign	Ex.	Operator	Sign	Ex.
EQ	=	equal	GT	>	greater	LT	<	Less
NE	≠	unequal	GE	≥	G&E	LE	≤	L&E

3.30.5 Arithmetic & Logic Operation

Table:

Function	Format	Attention
Definition	#i = #j	
Addition Subtraction Multiplication Division	#i = #j + #k ; #i = #j - #k ; #i = #j * #k ; #i = #j / #k ;	
Sin Asin Cos Acos Tan Atan	#i = SIN(#j) ; #i = ASIN(#j); #i = COS(#j) ; #i = ACOS(#j); #i = TAN(#j); #i = ATAN(#j);	90.5 degrees means 90 degrees & 30 points
Square root Absolute value Rounding off Round down Round up Natural logarithm Exponential function	#i = SQRT(#j); #i = ABS(#j) ; #i= ROUND(#j); #i = FIX(#j); #i = FUP(#j); #i = LN(#j); #i = EXP(#j);	
Or Exclusive or And	#i = #j OR #k ; #i = #j XOR #k ; #i = #j AND #k ;	Executing with binary system

3.30.6 Local Variable

#0--#20 : local variables only can be used to store data in macro program, such as a result of operation, when power is off, the local variables are initialized to the empty. The argument assignment to the local variable when calling the macro program.

3.30.7 Global Variable

#21--#600 : Their meanings are the same in different macro program.

When power is off, the variable #21--#100 is initialized to zero, the variable #101--#600 data is saved not to loss even if the power is off.

3.30.8 System Variable

#1000-- : the system variables are used to change various data when reading the running CNC. For example, the current position and the compensation of tool.

Special Attention: macro variables #100--#155 and #190--#202 have been used by the system, users can not use.

3.30.9 System Parameter Variable

#1001--#1099 : Value of X-axis length compensation for T1--T99(Unit: um)
#1101--#1199 : Value of D1 radius compensation for T1--T99(Unit: um)
#1201--#1299 : Value of Y(C)-axis length compensation for T1--T99(Unit: um)
#1301--#1399 : Value of D2 radius compensation for T1--T99(Unit: um)
#1401--#1499 : Value of Z-axis length compensation for T1--T99(Unit: um)
#1501--#1599 : Value of D3 radius compensation for T1--T99(Unit: um)
#1601--#1699 : Value of A-axis length compensation for T1--T99(Unit: um)
#1701--#1799 : Value of D4 radius compensation for T1--T99(Unit: um)

3.30.10 I/O variable

#1800: X00-X07 (D0-D7) ; input resistor
#1801: X08-X15 (D0-D7) ; input resistor
#1802: X16-X23 (D0-D7) ; input resistor
#1802: X16-X23 (D0-D7) ; input resistor
#1803: X24-X31 (D0-D70 ; input resistor
#1804: X32-X39 (D0-D7) ; input resistor
#1805: X40-X47 (D0-D7) ; input resistor
#1806: X60-X67 (D0-D7) ; input resistor
#1807: X74-X81 (D0-D7) ; Alarm of driver/Spindle
#1808: Y00-Y15 (D0-D15) ; output resistor
#1809: Y16-Y31 (D0-D15) ; output resistor
#1810: Y32-Y47 (D0-D15) ; output resistor

Waraning:

1. Macro variables #100-#155&#190-#201 was occupied by system, user cannot use.

2. User cannot use G70,G71,G72,G73,G92,G76 etc loop command on Macro program.

Note: the address G, L, N, Q, P can't be used as user-defined variables.

3.30.11 Message Hint Dialog Box

Format: MSG(hint words) or MSG[hint words] ;

Hint words is that user want to hint message on cnc system.

Note: 1. This code can be used on normal NC programs.

2. After hint message, cnc system will pause program automatically.

Format: STAF(hint words) or STAF[hint words];

Hints words is that user want to hint message on cnc system. And CNC system don't pause program automatically.

3.30.12 Build Processing Program Automatically

3.30.12.1 New/Open a program

Format: FILEON(Program) or FILEON[Program]

Example: FILEON(AABBCC) or FILEON[AABBCC]

It means that new or open a program "AABBCC"

3.30.12.2 Close program

Format: FILECE

It means that close current opening program, if without this code, system will close current program after program is finished.

3.30.12.3 Write codes into program

Format: FILEWD(Blocks) or FILEWD[Blocks]

Exmaple: FILEWD(G54G0X0Z0) or FILEWD[G54G0X0Z0]

It means that write a blocks of "G54G0X0Z0" into current openning program.

3.30.12.4 Write current absolute coordiante into program

Format: FILEWC

It means that wirte current abolute coordiante value into program.

Example:

```
G0X0Z0
FILEON[AABBCC]
FILEWD [G54G0X0Z0]
G1X45Z89
FILEWC
G1X99Z76
FILEWC
FILECE
```

After finished this program, system will new a program of "AABBCC" under directory of program, its blocks is :

```
G54G0X0Z0
X45Z89
X99Z76
```

3.31 User-defined Macro Instruction (G110-G170)

Every user-defined G code is corresponding to a macro program ProgramGxxx, user cannot programme the macro program in NC system, must edit the macro code in the computer, and then copy into the system.

3.31.1 Bolt Hole Circle Drilling Cycle

Defines the G152 function: the arc model porous drilling cycle. (must copy the macro program ProgramG152 into system).

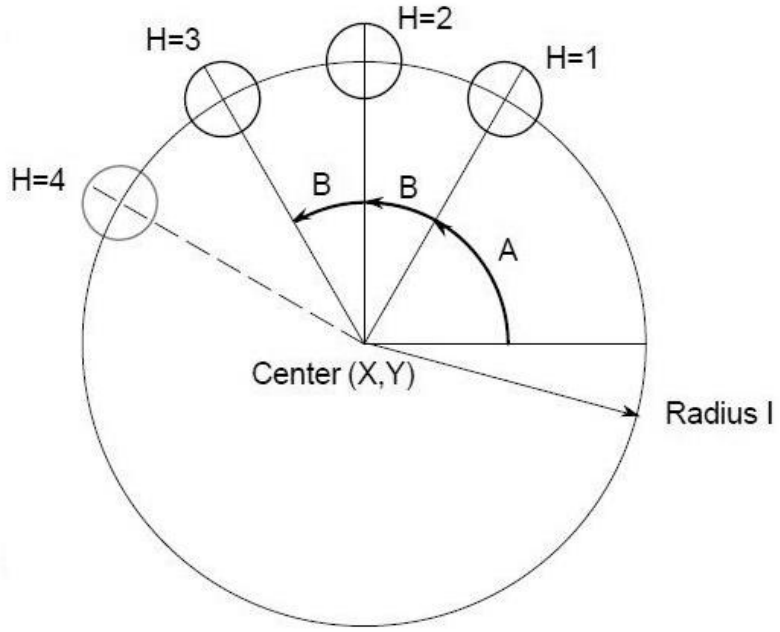

Fig3.31.1 Bolt Hole Circle Drilling Cycle

Format: G152 X_ Y_ Z_ R_ I_ A_ B_ H_ F_ ;

X_ : The X coordinate of the center of the circle. [#18]
Y_ : The Y coordinate of the center of the circle. [#19]
Z_ : Hole depth [#20]
R_ : Coordinate of an approaching point [#12]
F_ : Cutting feedrate [#5]
I_ : Radius of the circle [#7]
A_ : Drilling Start angle, also angle of the first hole [#0]
B_ : Incremental angle (Clockwise when negative value) [#1]
H_ : Number of holes [#6]

Macro program ProgramG152 as follows:

```
#80=#0
#81=#1
#82=#2
#85=#5
#86=#6
#87=#7
#92=#12
#98=#18
```

```
#99=#19
#100=#20
#30=#4003
#31=#4014
G90
IF[#30 EQ 90] GOTO 1
G53
#98=#5001+#98
#99=#5002+#99
N1 WHILE[#86 GT 0] DO 1
#35=#98+#87*COS[#80]
#36=#99+#87*SIN[#80]
G81X#35Y#36Z#100R#92F#85
#80=#80+#81
#86=#86-1
END 1
G#30 G#31 G80
M99
```

Example: Bolt hole circle drilling cycle G152 , to drill 5 holes at intervals of 45 degrees after a start angle of 0 degrees. On the circumference of a circle with radius 40. The absolute center of the circle is (100, 50)

Program:

```
G90 G92 X0 Y0 Z4
G152 X100 Y50 R10 Z-20.0 F20 I40.0 A0 B45.0 H5
M30
```

3.31.2 Inner Circle Groove Roughing Cycle (G110/G111)

This cycle starts from arc center, arc interpolation with spiral mode, until milling round groove. G110 is CCW Inner circle groove roughing cycle, G111 is CW Inner circle groove roughing cycle.

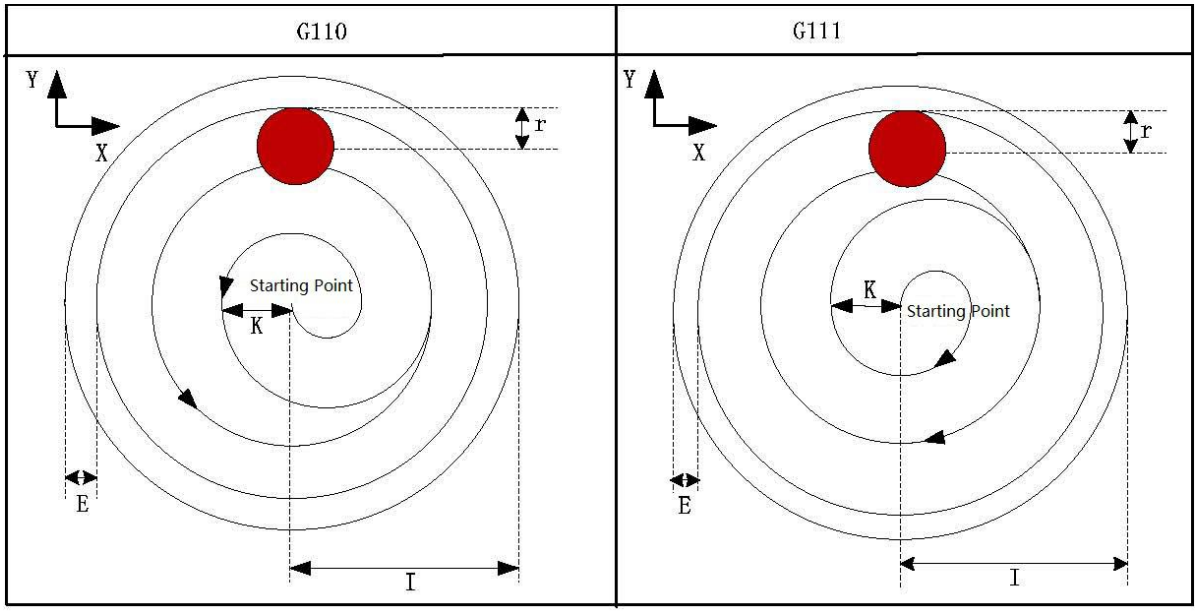

Format: G110/G111 X_ Y_ Z_ R_ I_ W_ Q_ K_ V_ E_ D_ F_

X_Y_: The starting point in XY plane
Z_ : The distance from point R to the bottom of the hole
R_ : The distance from the initial level to point R level
I_ : Radius of Groove Round
W_ : Depth of 1st cutting feed, disance from point R level
Q_ : Deptch of each cutting feed
K_ : Incremental Width
V_ : Height between unprocessing surface and cutter
E_ : Allowance for fine groove
D_ : Tool radius offset number
F_ : Cutting Feedrate

Note: 1. Radius of groove round, I, should be greater than radius of current tool.

2. Depth of 1st cutting feed, W, should be greater than 0. If depth of 1st cutting feed exceeds the groove bottom, then the machining is performed at the groove bottom;

3. Allowance for fine milling isnot less than 0, otherwise absolute value of negative number.

4. Range of Tool radius offset number , D, is 0~32. default is 0.

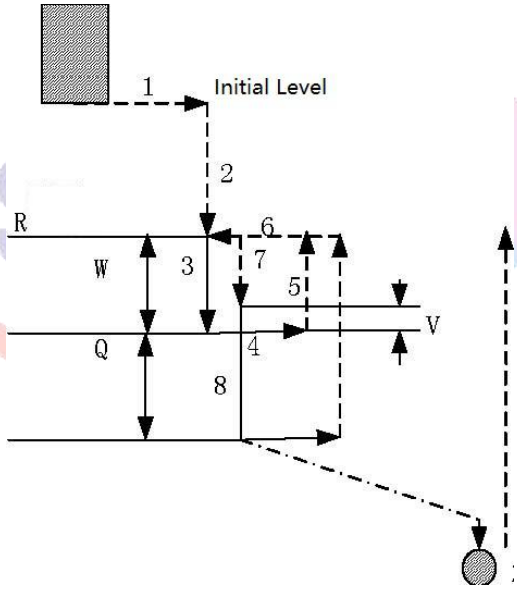

Fig3.31.2 Path of Inner Circle Groove Roughing Cycle

Process of Cycle:

(1) Rapid positioning to the position in XY plane
(2) Rapid down to point R level
(3) Cut a depth (W) downward at the cutting speed by helical mode, then feed to circle center,
(4) Mill the circle surface with a radius (I) helically outward from the center by an increment (K) each time;
(5) Return to point R level along Z axis;
(6) Axis X and Y rapidly position to the starting point;
(7) Rapid traverse to V , the distance to the unprocessing end surface;
(8) Cut a depth(Q+V) downward along Z axis;
(9) Repeats the operation (4)~(8) until the total depth of circle surface is finished;
(10) Return to point R level (G99);or return to initial level(G98).

Example: Rough milling an inner circle groove using the canned cycle code G110, as shown in the figure below: (D1=5).

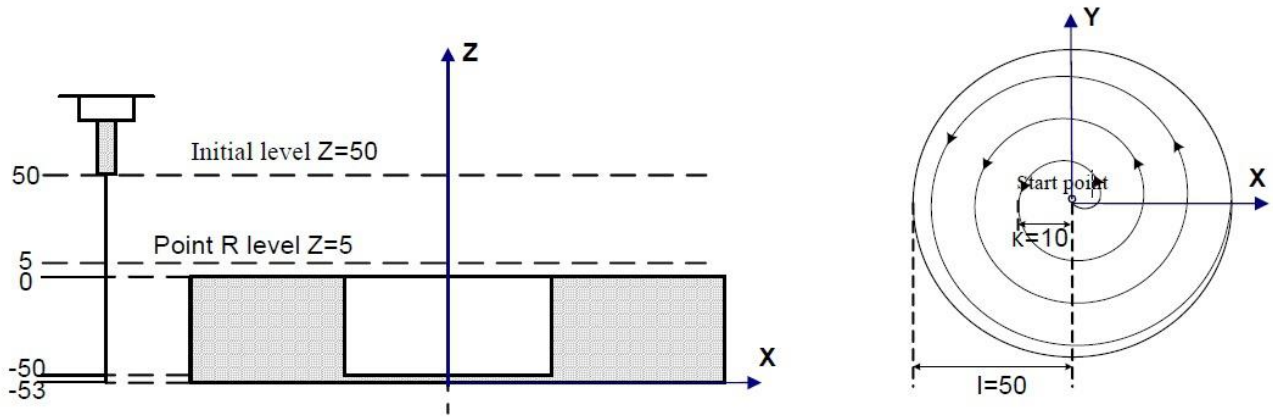

Fig3.31.3 Example of G110

G90 G00 X50 Y50 Z50 ; G00 Rpid traverse
G99 G110 X25 Y25 Z-50 R5 I50 W20 Q10 K10 E0 V10 F800 D1 ; Groove rough milling
G80 X50 Y50 Z50 ; Canned cycle cancel and return from point R level
M30 ;

3.31.3 Inner Circle Groove Fine Cycle (G112/G113)

The tool fine mills a full circle within a circle by the specified radius I and the specified direction, and it returns after finishing the fine milling.

G112: CCW Inner Circle Groove Fine Cycle ; C113: CW Inner Circle Groove Fine Cycle .

Format: G112/G113 X_ Y_ Z_ R_ I_ J_ D_ F_

X_Y_: The starting point in XY plane
Z_ : The distance from point R to the bottom of the hole
R_ : The distance from the initial level to point R level
I_ : Radius of Fine Milling Circle
J_ : Distance from fine milling start point to circle center
D_ : Tool radius offset number
F_ : Cutting Feedrate

Note: 1. Radius of fine milling circle, I, Its absolute value is used if it is negative.
2. Distance from fine milling starting point to circle center, J, Its absolute value is used if it is negative.
3. Allowance for fine milling isnot less than 0, otherwise absolute value of negative number.
4. Range of Tool radius offset number , D, is 0~32. default is 0.

Process of Cycle:

1) Rapid positioning to the position in XY plane;
2) Rapid down to point R level ;
3) Feed to the machining start point at the bottom of hole ;
4) Arc Interpolation by the transition arc 1 from the starting point;
5) Circle Interpolation for the whole circle by inner arc path of finish-milling ;
6) Circle Interpolation by transition arc 4 and return to the starting point ;
7) Return to the initial level or point R level according to G98/G99.

Command Path:

G112:CCW Inner Circle Groove Fine Cycle	G113:CW Inner Circle Groove Fine Cycle
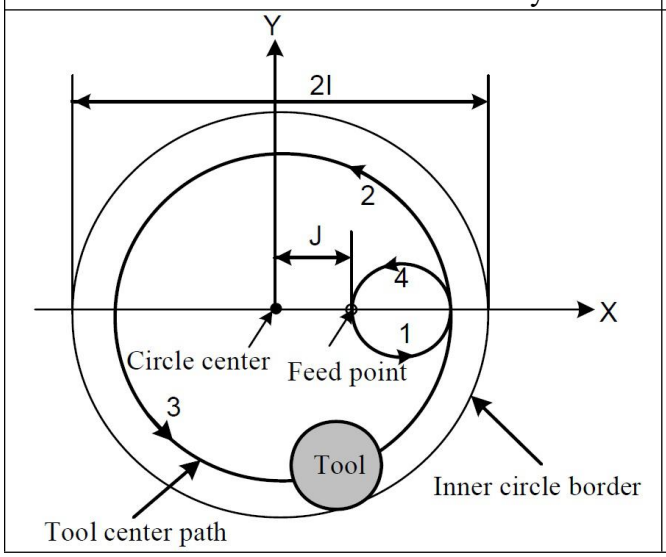	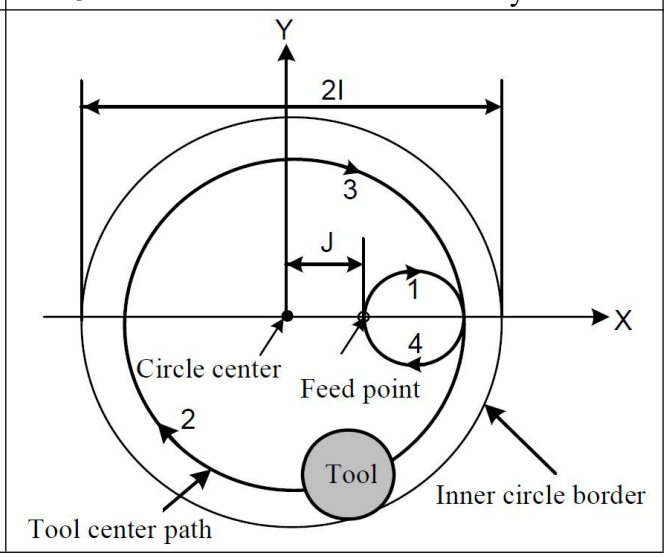

Note: Q, P, L is invalid when using G112/G113, but value of Q & P will be remained as canned cycle.

Example: Fine milling a circlar groove that has been rough milled as follows by canned cycle code G112. (D1=5).

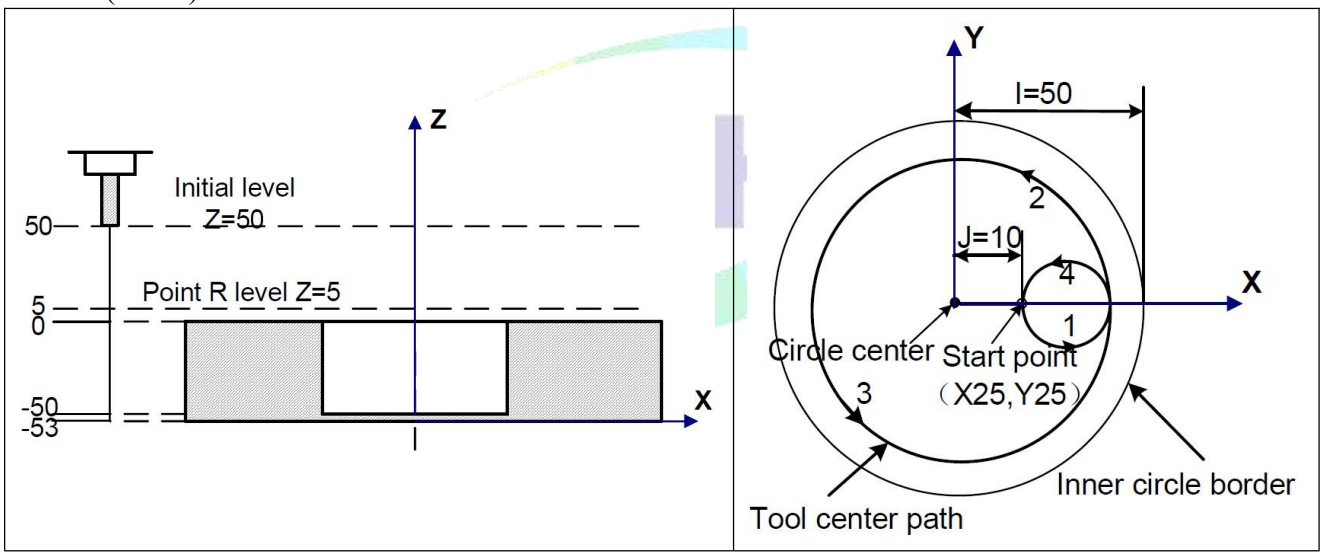


```
G90 G00 X50 Y50 Z50 ;          Rapid Positioning
G99 G24 X25 Y25 Z-50 R5 I50 J10 D1 F800 ;    Fine milling inner circle with CCW direction
G80 X50 Y50 Z50 ;              Cancel canned cancel and return to point R level
M30 ;                          End of program
```

Note: 1. Q, P, L is invalid when using G112/G113, but value of Q & P will be remained as canned cycle.

2. When use G112/G113 is used, G codes in 01 group cannot be used, otherwise G114/G115 is repalced by other codes in group 1.

3. Tool radius compensation: in the fixed cycle command, the tool radius compensation is ignored, the system calls the tool radius compensation specified by the program during the tool infeed.

3.31.4 Outer Circle Fine Milling Cycle (G114/G115)

Format: G114/G115 X_ Y_ Z_ R_ I_ J_ D_ F_ ;

X_Y_: The starting point in XY plane
Z_ : The distance from point R to the bottom of the hole
R_ : The distance from the initial level to point R level
I_ : Radius of Fine Milling Circle
J_ : Distance from fine milling start point to circle center
D_ : Tool radius offset number
F_ : Cutting Feedrate

Note: 1. Radius of fine milling circle, I, Its absolute value is used if it is negative.

2. Distance from fine milling starting point to circle center, J, Its absolute value is used if it is negative.

3. Allowance for fine milling isnot less than 0, otherwise absolute value of negative number.

4. Range of Tool radius offset number , D, is 0~32. default is 0.

Command Path:

G114: CCW Outer Circle Fine Milling Cycle	G115: CW Outer Circle Fine Milling Cycle
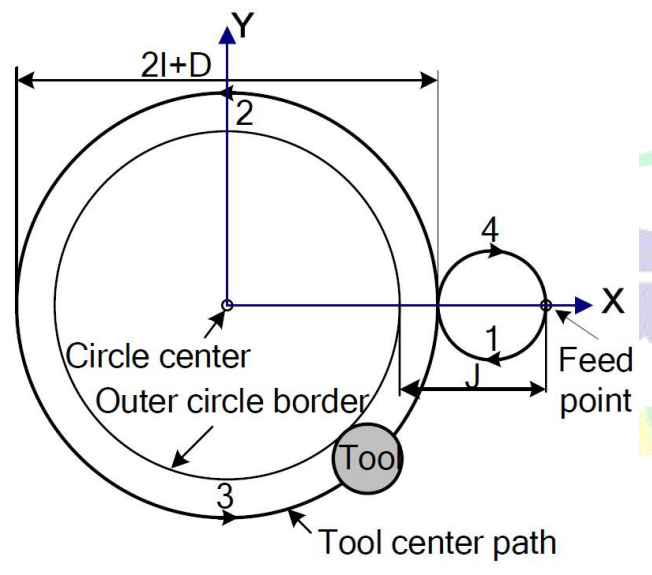	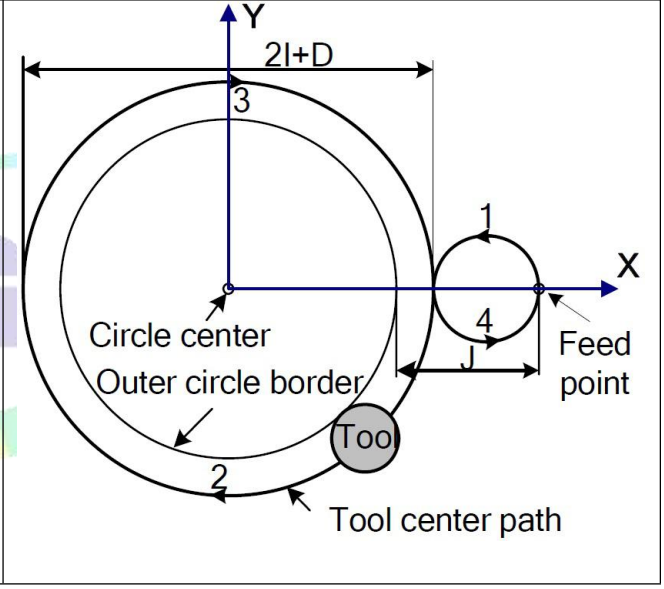

Command Path:

(1) Rapid positioning to a location within XY plane ;
(2) Rapid down to R level ;
(3) Feed to the bottom of hole
(4) Circular interpolation by the transition arc 1 from the starting point ;
(5) Circular interpolation for the whole circle by the path of arc 2 and arc 3 ;
(6) Circular interpolation by transition arc 4 and return to the starting point ;
(7) Return to the initial level(G98) or point R level (G99) .

In outer circle fine milling cycle, the interpolation directions of the transition arc and fine milling arc are different. The interpolation direction in the code means the one of the fine milling.

Note: 1. Q, P, L is invalid when using G114/G115, but value of Q & P will be remained as canned cycle.

2. When use G114/G115 is used, G codes in 01 group cannot be used, otherwise G114/G115 is repalced by other codes in group 1.

3. Tool radius compensation: in the fixed cycle command, the tool radius compensation is ignored, the system calls the tool radius compensation specified by the program during the tool infeed.

Example: Fine milling a circular groove that has been rough milled as follows by the canned cycle code G114.

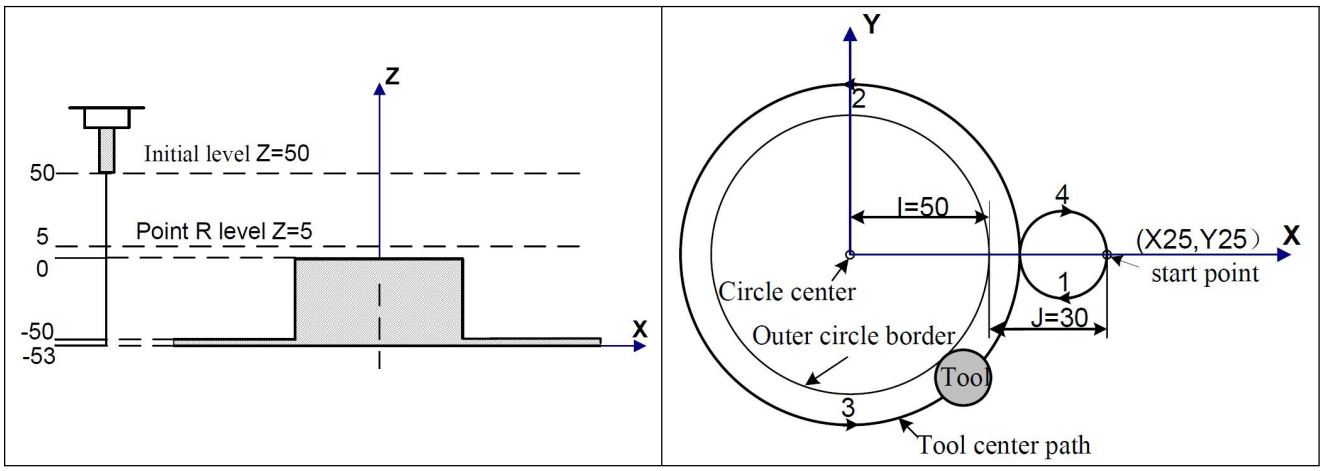

G90 G00 X50 Y50 Z50 ; Rapid positioning
G99 G114 X25 Y25 Z-50 R5 I50 J30 D1 F800 ; Outer circle fine milling
G80 X50 Y50 Z50 ; Cancel canned cycle and return from point R level
M30 ; End of program

3.31.5 Outer Circle Rough Milling Cycle (G116/G117)

This cycle starts from the staring point, cutter make circle interpolation with specificed radius & direction , until milling a pad.

G116: CCW Outer Circle Roung Milling cycle, G111: CW Outer Circle Rough Milling Cycle.

Format: G116/G117 X_ Y_ Z_ R_ I_ J_ W_ Q_ K_ C_ E_ D_ F_ ;

X_Y_: The starting point in XY plane
Z_ : The distance from point R to the bottom of the hole
R_ : The distance from the initial level to point R level
I_ : Radius of rough milling outer circle
J_ : Radius of workpiece
W_ : Depth of 1st cutting feed, disance from point R level
Q_ : Depth of each cutting feed in Z-axis direction
K_ : Incremental Width in XY plane
C_ : First cutting feed in X-axis direction
V_ : Height between unprocessing surface and cutter
E_ : Allowance for outer circle rough milling
D_ : Tool radius offset number
F_ : Cutting Feedrate

Note: 1. Radius of rough milling circle, I, Its absolute value is used if it is negative.

2. Radius of unprocessing workpiece, J, Its absolute value is used if it is negative.

3. Allowance for outer circle rough milling isnot less than 0, otherwise absolute value of negative number.

4. Depth of 1st cutting feed, W, should be greater than 0. If depth of 1st cutting feed exceeds the groove bottom, then the machining is performed at the groove bottom;

5. Depth of each cutting in Z-axis direction, Q, its absolute value is used if it is negative.

6. Incremental witdth in XY plane should be leshh diameter of cutter, greater than 0. Its absolute value is used if it is negative. If without specify K, default K= raidus of cutter.

7. Value of first cutting feed in X-axis direction, C, should not be less than radius of cutter+2.0, When positive number,feed in positive direction of X-axis;when negative number, feed in negative direction of X-axis.

8. Range of Tool radius offset number , D, is 0~32. default is 0.

Command Path:

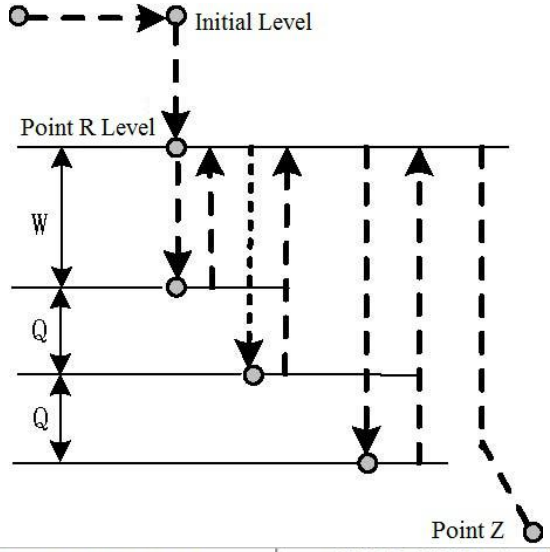

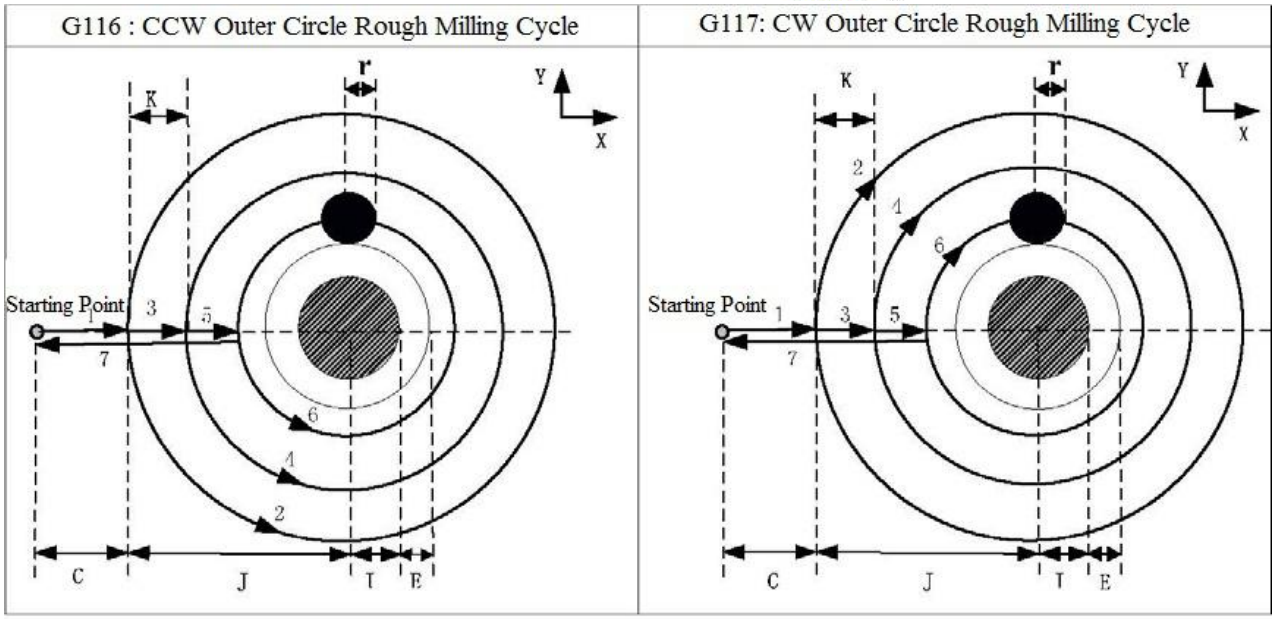

Command Process:

(1) Rapid positioning to a location within XY plane ;

(2) Rapid down to point R level , and then rapid down to point W level;

(3) First cutting feed(c) in X-axis direciton, Line 1 is feed with linear interpolation ;

(4) Whole Circle interpolation with arc 2 ;

(5) Cutting feed with increment width (K) from starting point to center until radius of round workpeice is (I+E);

(6) Cutter rapid return to point R level in Z-axis and then rapid traverse to starting point ;

(7) Cutter rapid down to depth of unprocessing end surface & each cutting feed (W+nQ);

(8) Loop run (4)~(7) until finish outer circle rough milling surface with depth of Z point;

(9) Return to point R level ;

(10) Return to starting point in XY plane.

In outer circle fine milling cycle, the interpolation directions of the transition arc and fine milling arc are different. The interpolation direction in the code means the one of the fine milling.

Note: 1. P, L is invalid when using G116/G117, but value of P will be remained as canned cycle.

2. When use G116/G117 is used, G codes in 01 group cannot be used, otherwise G116/G117 is repalced by other codes in group 1.

3. Tool radius compensation: in the fixed cycle command, the tool radius compensation is ignored, the system calls the tool radius compensation specified by the program during the tool infeed.

Example: Fine milling a circular pad that has been rough milled as follows by the canned cycle code G117. (D1=5mm)

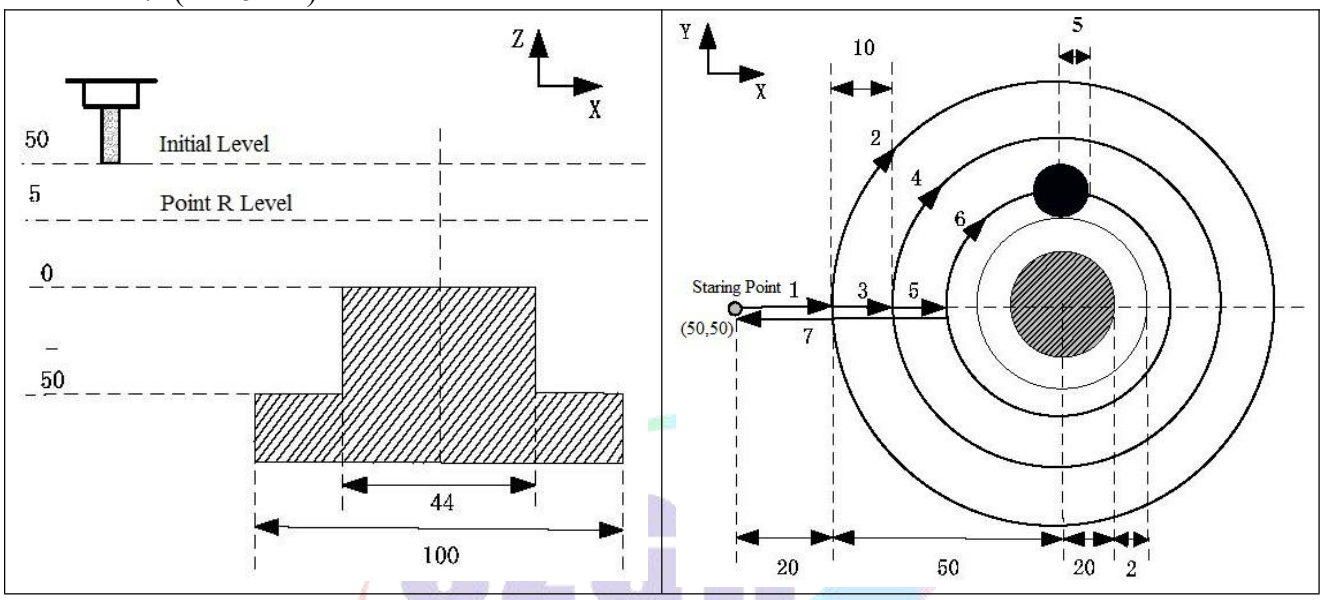

G90 G00 X0 Y0 Z50 ; Rapid positioning

G99 G117 X50 Y50 Z-50 R5 I20 J50 W20 Q10 K10 C20 E2 D1 F800 ; Outer circle roughing

G80 X50 Y50 Z50 ; Cancel canned cycle and return from point R level

M30 ; End of program

3.31.6 Outer Rectangle Rough Milling Cycle (G132/G133)

This cycle starts from the staring point, cutter make circle interpolation with specificed parameters , until milling a rectangle pad.

G132:CCW Outer Rectangle Roung Milling cycle,G133:CW Outer Rectangle Rough Milling cycle.

Format: G132/G133 X_ Y_ Z_ R_ I_ J_ A_ B_ W_ Q_ K_ C_ E_ D_ F_ ;

X_Y_: The starting point in XY plane
Z_ : The distance from point R to the bottom of the hole
R_ : The distance from the initial level to point R level
I_ : Width of rough milling outer rectangle in X-axis (>0)
J_ : Width of rough milling outer rectangle in Y-axis (>0)
A_: Width of unprocessing rectangle workpiece in X-axis (>0)
B_ : Width of unprocessing rectangle workpiece in Y-axis (>0)
W_ : Depth of 1st cutting feed, disance from point R level (>0)
Q_ : Depth of each cutting feed in Z-axis direction
K_ : Incremental Width in XY plane (>0)
C_ : First cutting feed in X-axis direction

V_ : Height between unprocessing surface and cutter
E_ : Allowance for outer rectangle rough milling
D_ : Tool radius offset number
F_ : Cutting Feedrate

Note: 1. Width of rough milling outer rectangle, I & J, Its absolute value is used if it is negative.

2. Width of unprocessing workpiece,A&B, Its absolute value is used if it is negative.

3. Allowance for outer rectangle rough ,E, isnot less than 0, otherwise absolute value of negative number.

4. Depth of 1st cutting feed, W, should be greater than 0. If depth of 1st cutting feed exceeds the groove bottom, then the machining is performed at the groove bottom;

5. Depth of each cutting in Z-axis direction, Q, its absolute value is used if it is negative.

6. Incremental witdth in XY plane should be leshh diameter of cutter, K, is greater than 0. Its absolute value is used if it is negative. If without specify K, default K= raidus of cutter.

7. Value of first cutting feed in X-axis direction, C, should not be less than radius of cutter+2.0, When positive number,feed in positive direction of X-axis;when negative number, feed in negative direction of X-axis.

8. Range of Tool radius offset number , D, is 0~32. default is 0.

Command Path:

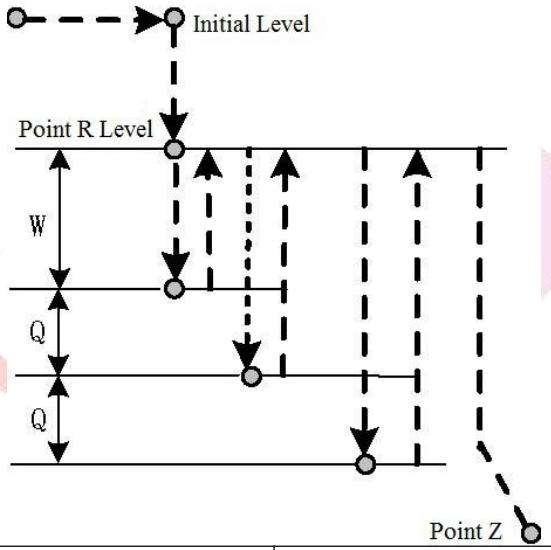

G132:CCW Outer Rectangle Roughing Cycle	G133: CW Outer Rectangle Roughing Cycle
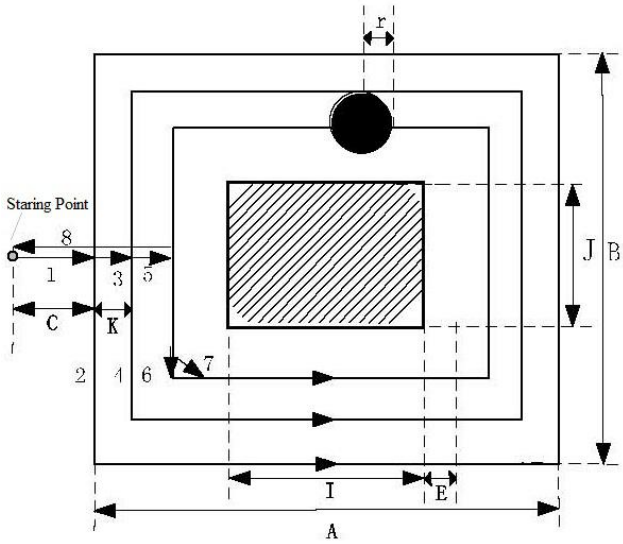	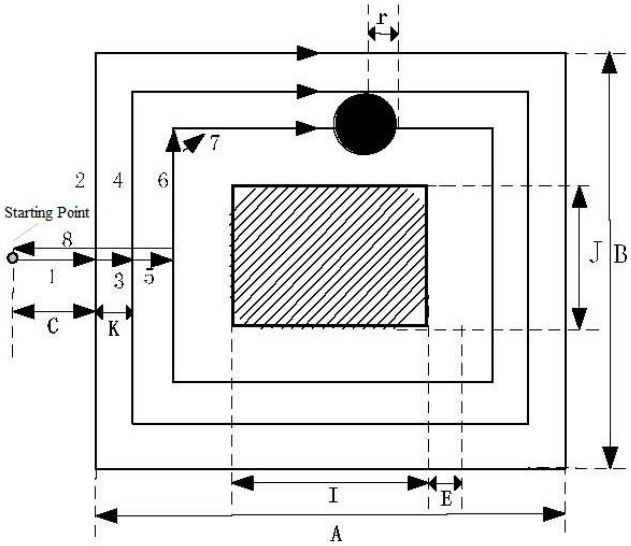

Command Process:

(1) Rapid positioning to a location within XY plane ;

(2) Rapid down to point R level , and then rapid down to point W level at first time;

(3) First cutting feed(C) in X-axis direciton, Line 1 is feed with linear interpolation ;

(4) Whole linear interpolation with line 2 ;

(5) Cutting feed with increment width (K) from starting point to center until Length of rectangle pad is (I+2E), Width of rectangle pad is (J+2E);

(6) Milling coner of rectangle

(7) Cutter rapid return to point R level in Z-axis and then rapid traverse to starting point ;

(8) Cutter rapid down to depth of unprocessing end surface & each cutting feed (W+nQ);

(9) Loop run (4)~(7) until finish outer circle rough milling surface with depth of Z point;

(10) Return to point R level ;

(11) Return to starting point in XY plane.

In outer circle fine milling cycle, the interpolation directions of the transition arc and fine milling arc are different. The interpolation direction in the code means the one of the fine milling.

Note: 1. P, L is invalid when using G116/G117, but value of P will be remained as canned cycle.

2. When use G116/G117 is used, G codes in 01 group cannot be used, otherwise G116/G117 is repalced by other codes in group 1.

3. Tool radius compensation: in the fixed cycle command, the tool radius compensation is ignored, the system calls the tool radius compensation specified by the program during the tool infeed.

Example: Fine milling a rectangle pad(Length=50, Width=40, Height=50) that has been rough milled as follows by the canned cycle code G133. (D1=5mm)

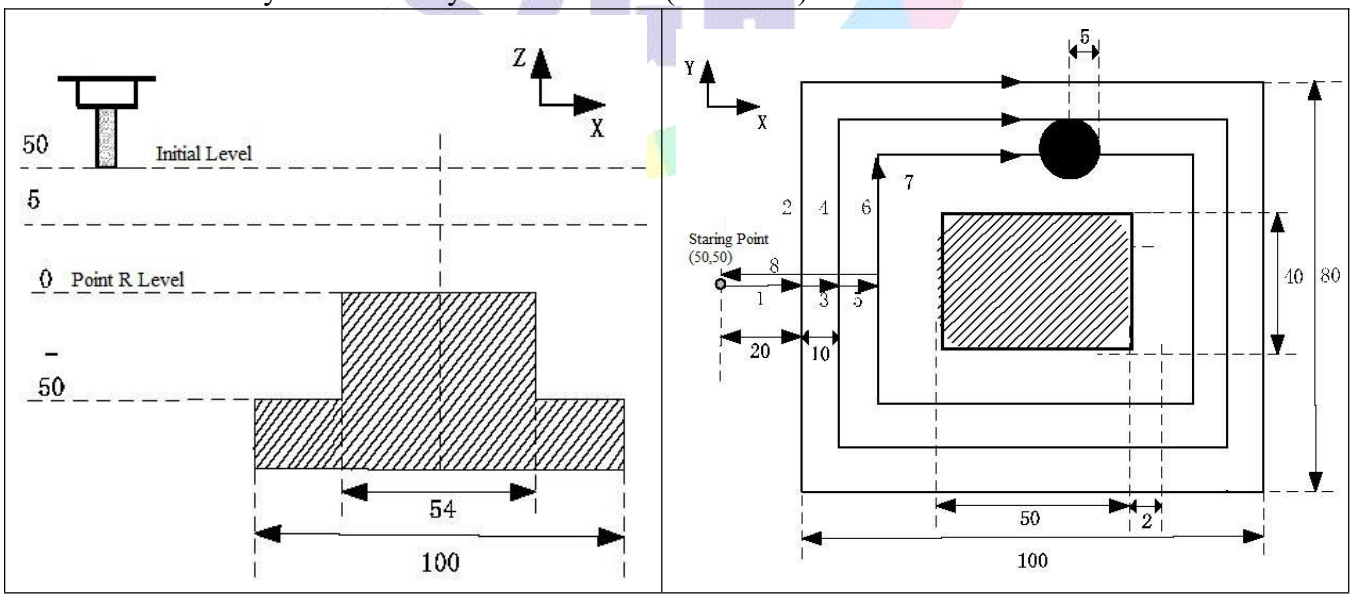

G90 G00 X0 Y0 Z50 ; Rapid positioning

G99 G133 X50 Y50 Z-50 R5 I50 J40 A100 B80 W20 Q10 K10 C20 E2 D1 F800 ;

Outer rectangle roughing

G80 X50 Y50 Z50 ; Cancel canned cycle and return from point R level

M30 ; End of program

3.31.7 Inner Rectangle Groove Roughing Cycle (G134/G135)

This cycle starts from rectangle center, linear interpolation cycle until milling rectangle groove.

Format: G134/G135 X_ Y_ Z_ R_ I_ J_ K_ W_ Q_ V_ E_ D_ F_

X_Y_: The starting point in XY plane
Z_ : The distance from point R to the bottom of the hole
R_ : The distance from the initial level to point R level
I_ : Width of rough milling inner rectangle in X-axis (>0)
J_ : Width of rough milling inner rectangle in Y-axis (>0)
K_ : Incremental Width in XY Plane
W_ : Depth of 1st cutting feed, disance from point R level
Q_ : Deptch of each cutting feed
V_ : Height between unprocessing surface and cutter (>0)
E_ : Allowance for fine groove
D_ : Tool radius offset number
F_ : Cutting Feedrate

Note: 1. Length & Width of groove rectangle, I & J, should be greater than radius of current tool.

2. Depth of 1st cutting feed, W, should be greater than 0. If depth of 1st cutting feed exceeds the groove bottom, then the machining is performed at the groove bottom;

3. Allowance for rough milling isnot less than 0, otherwise absolute value of negative number.

4. Range of Tool radius offset number , D, is 0~32. default is 0.

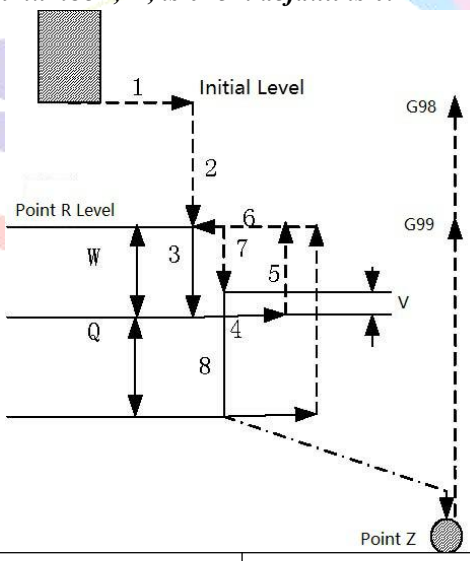

G134: CCW Inner Rectangle Groove Rough cycle	G135: CW Inner Rectangle Groove Rough Cycle
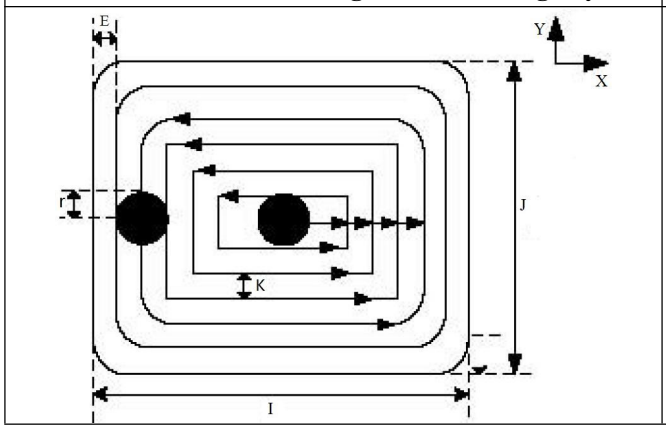	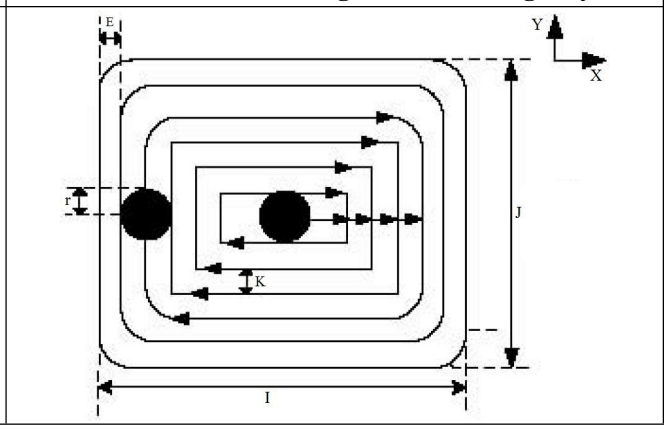

Process of Cycle:

(1) Rapid positioning to the position in XY plane

(2) Rapid down to point R level

(3) Cut a depth (W) downward at the cutting speed by helical mode,

(4) Mill the rectangle surface helically, outward from the center, with a incremental width (K) each time;

(5) Cutter return to point R level along Z axis;

(6) Axis X and Y rapidly position to the center of rectangle;

(7) Rapid traverse to V , the distance to the unprocessing end surface;

(8) Cut a depth(Q+V) downward along Z axis;

(9) Repeats the operation (4)~(8) until the total depth of rectangle surface is finished;

(10) Return to point R level (G99);or return to initial level(G98).

Note: 1. P, L is invalid when using G134/G135, but value of P will be remained as canned cycle.

2. When use G134/G135 is used, G codes in 01 group cannot be used, otherwise G134/G135 is repalced by other codes in group 1.

3. Tool radius compensation: in the fixed cycle command, the tool radius compensation is ignored, the system calls the tool radius compensation specified by the program during the tool infeed.

Example: Rough milling an inner rectangle groove using the canned cycle code G134, as shown in the figure below: (D1=5, Length of rectangle =70 , Width of rectangle =50mm).

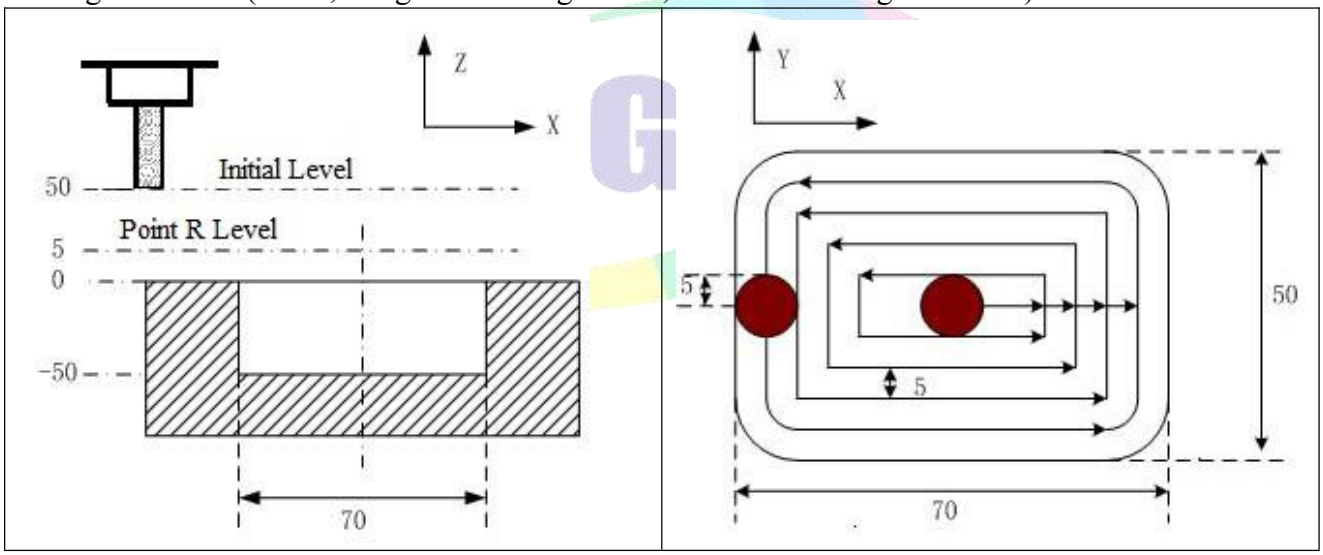

Fig3.31.7 Example of G134

G90 G00 X50 Y50 Z50 ; G00 Rpid traverse

G99 G134 X25 Y25 Z-50 R5 I70 J50 W20 Q10 K5 E0 V10 F800 D1 ; Groove rough milling

G80 X50 Y50 Z50 ; Canned cycle cancel and return from point R level

M30 ;

3.31.8 Inner Rectangle Groove Fine Milling Cycle (G136/G137)

The tool fine milling within a retangle by the specified width & direction, and it returns after finishing the fine milling.

G136:CCW Inner Rectangle Groove Fine Milling Cycle ; C137:CW Inner Rectangle Groove Fine Milling Cycle .

Format: G136/G137 X_ Y_ Z_ R_ I_ J_ D_ K_ U_ F_ ;

X_Y_: The starting point in XY plane
Z_ : The distance from point R to the bottom of the hole
R_ : The distance from the initial level to point R level
I_ : Width of rectangle in X-axis
J_ : Width of rectangle in Y-axis
K_ : Distance from fine milling start point to rectangle side in X-axis
U_ : Coner arc radius
D_ : Tool radius offset number
F_ : Cutting Feedrate

Note: 1. Width of rectangle in X-axis, I, Range is -99999999~99999999 (*min unit). Its absolute value is used if it is negative.

2. Width of rectangle in Y-axis, J,Range is -99999999~99999999 (*min unit). Its absolute value is used if it is negative.Value of J must be not less than diameter , otherwise alarm.

3. Distance from fine milling starting point to rectangle side in X-axis,K,is greater than radius of tool. Its absolute value is used if it is negative.

4. No corner transition if coner arc radius, U, is omitted. System will alarm when U is omitted or 0 & tool radius is less than 0.

5. Range of Tool radius offset number , D, is 0~32. default is 0.

Command Path:

G136:CCW Inner Rectangle Groove Fine Cycle	C137:CW Inner Rectangle Groove Fine Cycle
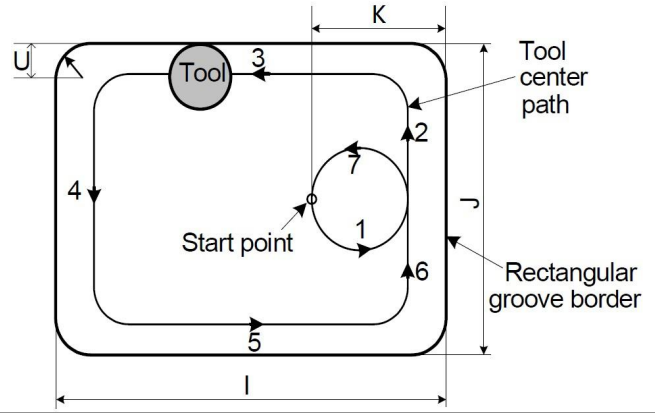	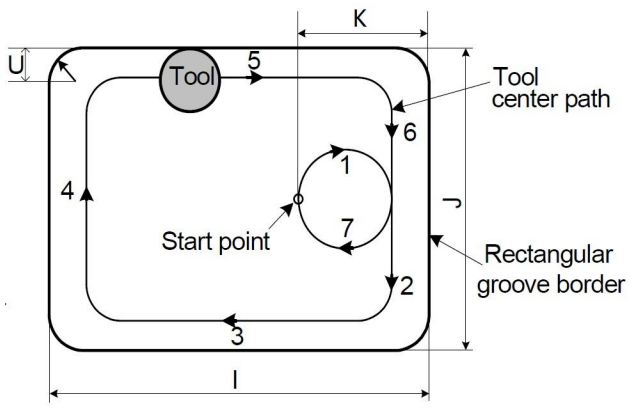

Process of Cycle:

1) Rapid positioning to the position in XY plane;
2) Rapid down to point R level ;
3) Cutting Feed to the machining start point at the bottom of hole ;
4) Perform arc interpolation by the transition arc 1 from the starting point;
5) Perform linear & circle interpolation by tha path 2-3-4-5-6 ;
6) Perform circle interpolation by transition arc 7 and return to the starting point ;
7) Return to the initial level or point R level according to G98/G99.

Note: Q, P, L is invalid when using G112/G113, but value of Q & P will be remained as canned cycle.

Example: Fine milling a rectangle groove that has been rough milled as follows by canned cycle code G136. (D1=5).

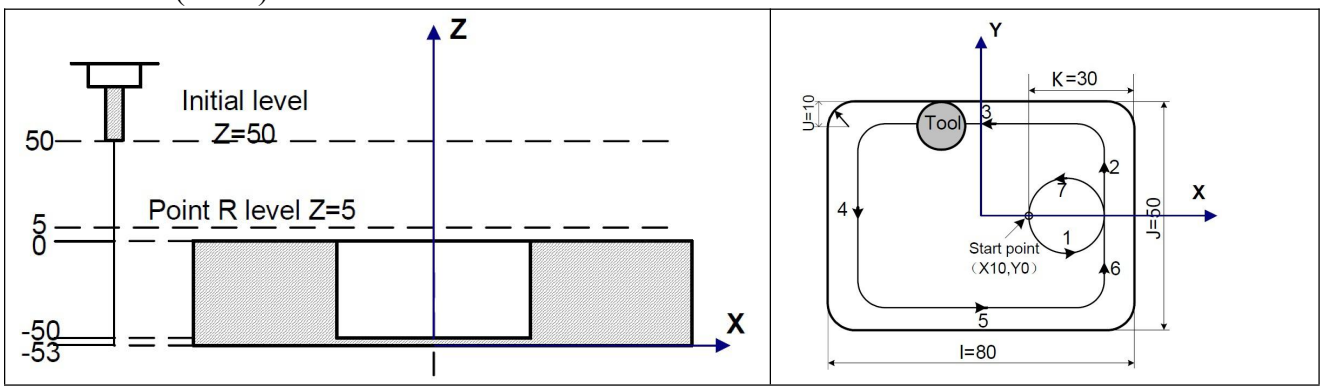

G90 G00 X50 Y50 Z50 ; Rapid Positioning

G99 G24 X10 Y10 Z-50 R5 I80 J50 K30 U10 D1 F800 ; CCW fine milling rectangle

G80 X50 Y50 Z50 ; Cancel canned cancel and return to point R level

M30 ; End of program

Note: 1. When use G112/G113 is used, G codes in 01 group cannot be used, otherwise G114/G115 is repalced by other codes in group 1.

2. Tool radius compensation: in the fixed cycle command, the tool radius compensation is ignored, the system calls the tool radius compensation specified by the program during the tool infeed.

3.31.9 Outer Rectangle Fine Milling Cycle (G138/G139)

The tool performs fine milling outside the retangle by the specified width & direction, and it returns after finishing the fine milling.

G138: CCW Outer Rectangle Fine Milling Cycle ; C139: CW Outer Rectangle Fine Milling Cycle .

X_Y_: The starting point in XY plane
Z_ : The distance from point R to the bottom of the hole
R_ : The distance from the initial level to point R level
I_ : Width of rectangle in X-axis
J_ : Width of rectangle in Y-axis
K_ : Distance from fine milling start point to rectangle side in X-axis
U_ : Coner arc radius
D_ : Tool radius offset number
F_ : Cutting Feedrate

Note: 1. Width of rectangle in X-axis, I,Range is -99999999~99999999 (*min unit). Its absolute value is used if it is negative.

2. Width of rectangle in Y-axis, J, Range is -99999999~99999999(*min unit). Its absolute value is used if it is negative.

3. Distance from fine milling starting point to rectangle side in X-axis,K,is greater than radius of tool. Its absolute value is used if it is negative.

4. No corner transition if coner arc radius, U, is omitted.

5. Range of Tool radius offset number , D, is 0~32. default is 0.

Command Path:

G138:CCW Outer Rectangle Fine Milling Cycle	G139: CW Outer Rectangle Fine Milling Cycle
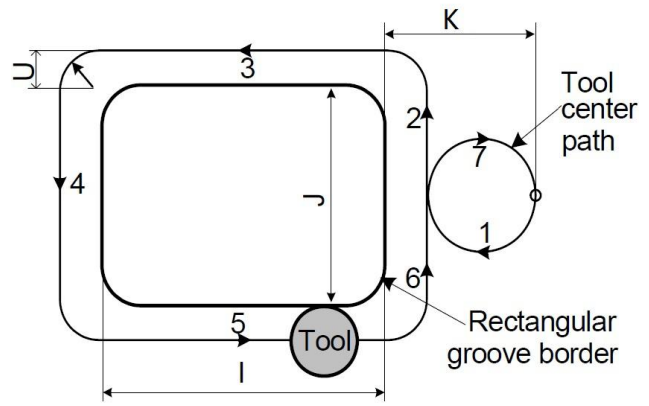	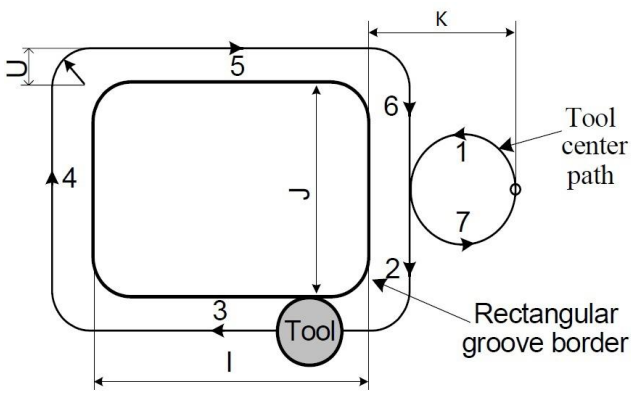

Command Path:

(1) Rapid positioning to a location within XY plane ;
(2) Rapid down to R level ;
(3) Cutting Feed to the bottom of hole
(4) Performs circular interpolation by the transition arc 1 from the starting point ;
(5) Performs linear & circular interpolation by the path 2-3-4-5-6 ;
(6) Performs circular interpolation by transition arc 7 and return to the starting point ;
(7) Return to the initial level(G98) or point R level (G99) .

In outer rectangle fine milling cycle, the interpolation directions of the transition arc and fine milling arc are different. The interpolation direction in the code means the one of the fine milling.

Note: 1. Q, P, L is invalid when using G114/G115, but value of Q & P will be remained as canned cycle.

2. When use G114/G115 is used, G codes in 01 group cannot be used, otherwise G114/G115 is repalced by other codes in group 1.

3. Tool radius compensation: in the fixed cycle command, the tool radius compensation is ignored, the system calls the tool radius compensation specified by the program during the tool infeed.

Example: Fine milling a outer rectangle pad that has been rough milled as follows by the canned cycle code G138. (D1=5mm)

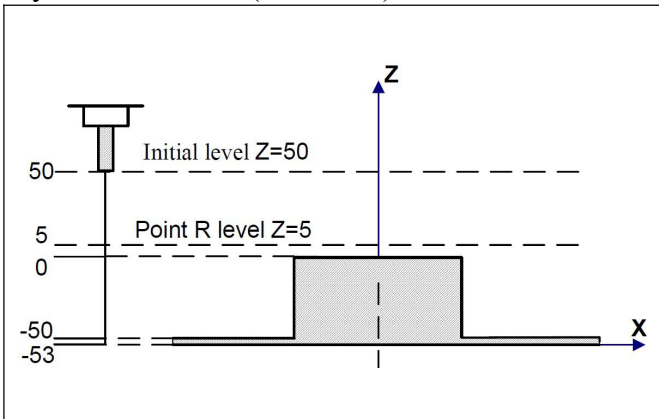	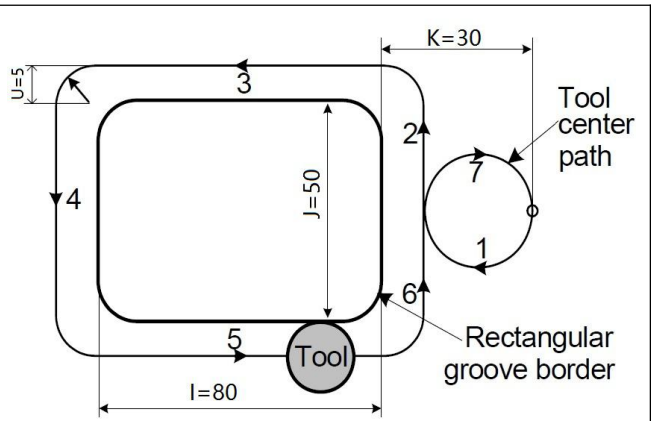

G90 G00 X50 Y50 Z50 ; Rapid positioning
G99 G138 X25 Y25 Z-50 R5 I80 J50 K30 U5 D1 F800 ; Outer rectangle fine milling
G80 X50 Y50 Z50 ; Cancel canned cycle and return from point R level
M30 ; End of program

3.31.10 Tool Change for Linear Tool Magazine (G120)

This code is used to performs tool chang for linear tool magazine in steps.

Format: G120 T_ ;

T_ : Number of exchanging tool.

a) Parameter Set: Before run this tool changing code, it needs to set related parameters well firstly of all.It needs to set P900=4 in Other parameter, and then reboot SZGH CNC system. Press "Enter" & "PgDn" key to enter dialog box.

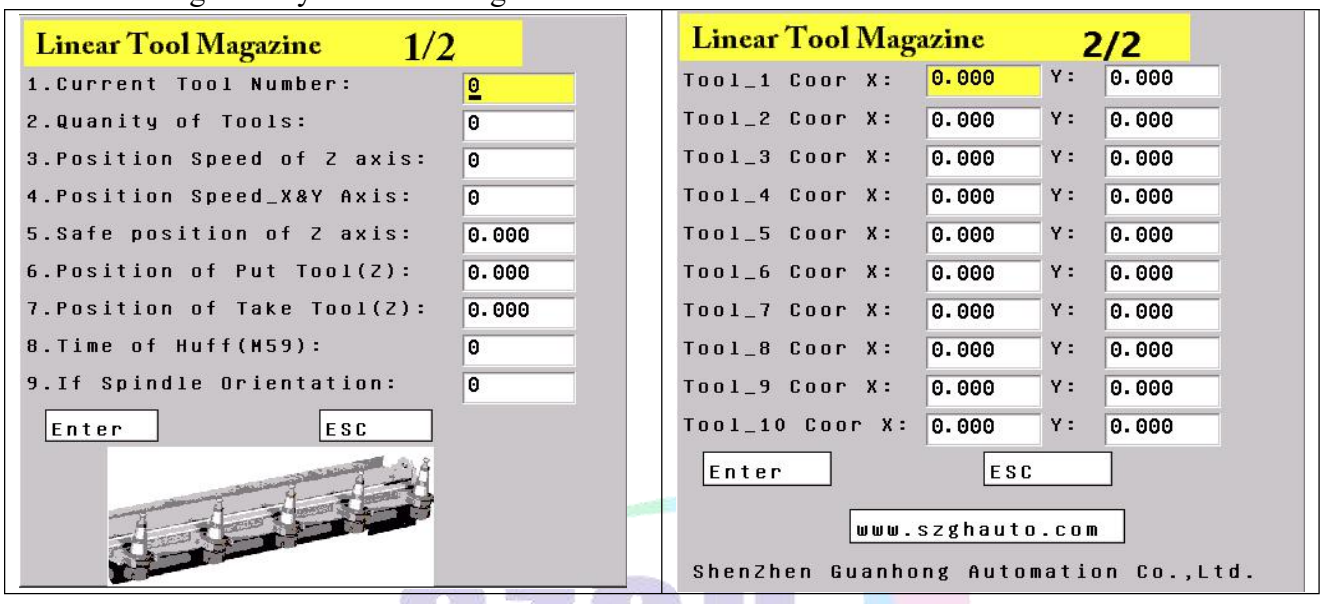

Note:This coordinate value is position at machine coordiante system(G53).

In Other parameter: P13=1 ; set interlock between chuck and rotation of spindle

P20= 0 or 1 ; set mode of chuck loose/tighten tool

In Axis parameter: P40_D1=1 ; set for detect position of chuck loose/tighten tool

b) IO ports

Signal	PIN	Function
M10	PIN21_CN3 Plug	Output for tighten tool
M71	PIN9_CN10 plug	Output for loose tool (when P20=1 in Other parameter)
M14	PIN24_CN10 plug	Detect position of tighten tool
M12	PIN11_CN10 plug	Detect position of loose tool
M61	PIN19_CN10 plug	Output for Spindle orientation
M22	PIN5_CN10 plug	Detect end of spindle orientation
M59	PIN6_CN10 plug	Output for huff/blower, to clear dust of tools

c) Steps of tool change

1) Z-axis go home(zero point of G53)	2) Spindle Orientation(it can be omitted)
3) Z-axis go to safe position(prepare to put tool)	4) XY-axis move to position of put tool
5) Z-axis down to position of put tool	6) Chuck loose tool & Huff
7) Z-axis up to safe position (prepare to take tool)	8) XY-axis move to position of take tool
9) Z-axis down to position of take tool	10) Chuck tighten tool
10) Z-axis go to safe position	Tool change is finished.

Note: 1. all coordinate value are absolute position at machine coordinate system

2. #301-#400 are taken up at control program for linear tool magazine, cannot be used to the other.

3.31.11 Tool change for Hat Tool Magazine (G121/G122)

This code is used to performs tool chang for hat type tool magazine in steps & tool selection is set by ac motor(G121) or by servo motor(G122) ,which is controlled by A-axis.

Format: G121/G122 T_ ;

T_ : Number of exchanging tool.

a) Parameter Set: Before run this tool changing code, it needs to set related parameters well firstly of all.It needs to set P900=4 in Other parameter, and then reboot SZGH CNC system. Press "Enter" & "PgDn" key to enter dialog box.

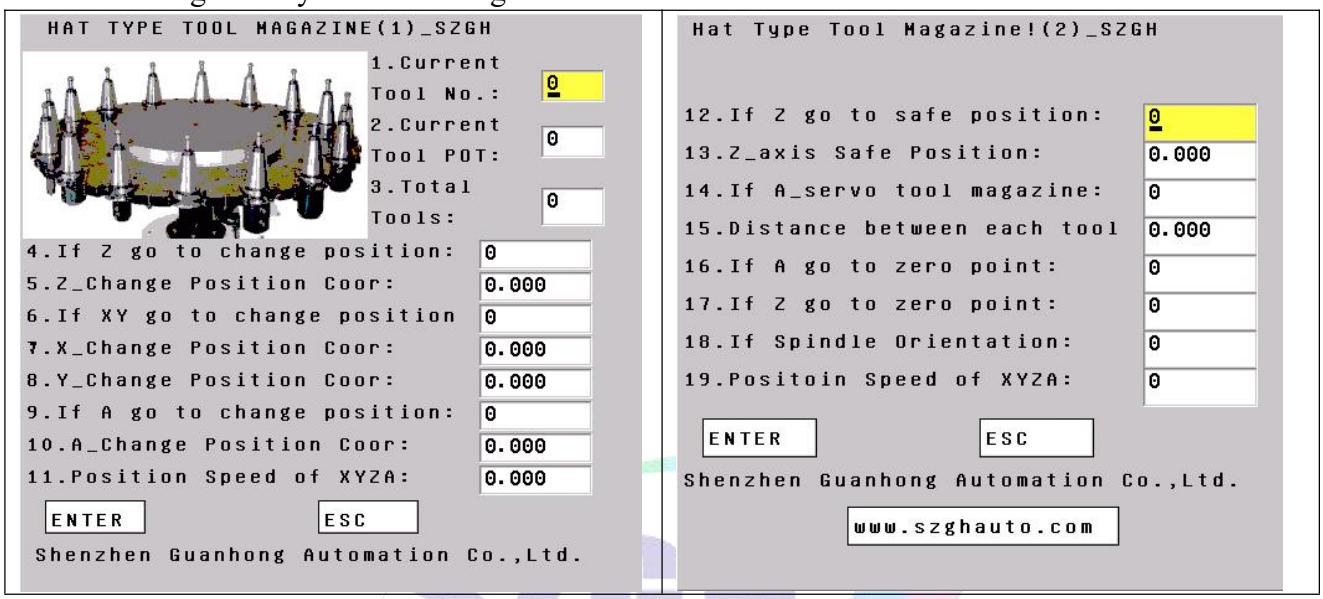

Note:This coordinate value is position at machine coordiante system(G53).

1.Current Tool No.: It sets current tool number in spindle, if without tool in spindle, set to 0.

2.Current Tool POT: It sets current tool seater in tool magazine.

3.Total Tools: It sets total numbers, Range: don't over 20 tools.

Suggestion: When tools are over 20, please use our SZGH-CNC1000MDcb series CNC system.

4.If Z go to change position: It sets whether Z-axis go to tool change position, 1:Yes, 0:No.

5.Z_Change Position Coor: It sets Machine Coordinate value of tool change position in Z-axis.

6.If XY got to change position: It sets whether XY-axis go to tool change position, 1:Yes, 0:No.

7.X_Change Position Coor: It sets Machine Coordinate value of tool change position in X-axis.

8.Y_Change Position Coor: It sets Machine Coordinate value of tool change position in Y-axis.

9.If A go to change position: It sets whether A-axis go to tool change position, 1:Yes, 0:No.

10.A_Change Position Coor: It sets Machine Coordinate value of tool change position in A-axis.

11.Position Speed of XYZA: It sets the speed of XYZ that move to tool change position.

12.If Z go to safe position: It sets whether Z-axis go to safe position, 1:Yes, 0:No.

13.Z-axis Safe Position: It sets value of safe height in Z-axis(increment).

14.If A_Servo tool magazine: It sets if rotation magazine is controlled by A-axis, 1:Yes, 0:No

15.Distance between each tool: It sets distance between each tool.

16.If A go to zero point: It sets if A-axis go to zero point, 1: Yes, 0: No .

17.If Z go to zero point: It sets if Z-axis go to zero point , 1: Yes, 0: No .

18. If spindle Orientation: It sets if spindle do orientation, 1: Yes, 0: No .

19.Rotating Speed of A_Axis: It sets speed of rotating for magazine.

In Other parameter: P13=1 ; set interlock between chuck and rotation of spindle
P20= 0 or 1 ; set mode of chuck loose/tighten tool
In Axis parameter: P40_D1=1 ; set for detect position of chuck loose/tighten tool

b) IO ports

Signal	PIN	Function
X00	PIN1_CN4 plug	Detection tool magazine at UP position
X01	PIN2_CN4 plug	Detection tool magazine at Down position
X02	PIN3_CN4 plug	Detection of Tool seat(POT) in position for tool change
X03	PIN4_CN4 plug	Detection of SP-Orientation Finished
X04	PIN5_CN4 plug	Detection of position of safe height in Z-axis
X05	PIN6_CN4 plug	Detection of position of forwarder of tool magazine
X06	PIN7_CN4 plug	Detection of position of backward of tool magazine
X07	PIN8_CN4 plug	Counting of tools
+T	PIN12_CN4 plug	CW Rotation of Tool Magazine
-T	PIN13_CN4 plug	CCW Rotation of Tool Magazine
M10	PIN21_CN3 plug	Output for tighten tool
M71	PIN9_CN10 plug	Output for loose tool (when P20=1 in Other parameter)
M14	PIN24_CN10 plug	Detect position of tighten tool
M12	PIN11_CN10 plug	Detect position of loose tool
M61	PIN19_CN10 plug	Output for Spindle orientation
M22	PIN5_CN10 plug	Detect end of spindle orientation
M59	PIN6_CN10 plug	Output for huff/blower, to clear dust of tools

c) Steps of tool change

1) If P17=1, Z-axis go home(zero point of G53)
2) If P4=1, Z-axis go to tool change position, also coordinate value of P5
3) If P18=1, Spindle Orientation(it can be omitted when P18=0), output M61, detect M22
4) If P6=1, XY-axis move to tool change position, also coordinate value of P7 & P8
5) If P9=1, A-axis move to tool change position, also coordinate value of P9
6) Detect position of tool POT(X02), Magazine Forward(M73), detect position of forward(X05)
7) Spindle Chuck Loose tool(M11), detect position of loose tool(M12)
8_1) If P12=1, Z-axis lift with safe height(value of P19), detect position of safe height(X04)
8_2) If P12=0, Magazine down to safe position(M79), detect position of down magazine(X01)
9) Magazine rotate & select tool(Y18/Y19), detect counts of tools(T08)
10) Detect position of tool POT after selecting tool(X02),
11_1) If P12=1, Z-axis down with safe height(value of P19), detect position of tool change (-X04)
11_2) If P12=0, Magazine up to safe position(M59), detect position of up magazine(X00)
12) Spindle Chuck Tighten tool(M10), detect position of tighten tool(M12)
13) Magazine back to original position(M63), detect position of magazine_home(X06)
14) If P17=1, Z-axis go home(zero point of G53) & Tool change is finished.

Warning: 1. all coordinate value are absolute position at machine coordinate system
2. #301-#400 are taken up at control program for linear tool magazine, cannot be used to the other.
3. Tool length compensation will be canceled after run exchanging codes G120/G121/G122.
4. System will enter Machine Coordinate System automatically after running G120/G121/G122

Chapter 4 M INSTRCUTIONS

4.1 M Function (Auxiliary Function)

M instruction consists of instruction address M and its following 1~2 bit digits, used for controlling the flow of executed program or outputting M instructions to PLC.

M □□
└→ Instruction value(the leading zero can be omitted)
└→ Instruction address

When address M followed by a number is specified, a code signal and strobe signal are transmitted. These signals are used for turning on/off the power to the machine.

In general, only one M code is valid in a block but up to three M codes can be specified in a block (although some machines may not allow that). The correspondence between M codes and functions is up to the machine tool builder.

All M codes are processed in the machine except for M97 M98, M99,M codes for calling a subprogram , and M codes for calling a custom macro. Refer to the appropriate manual issued by the machine tool builder.

The following M codes have special meanings.

M00, M01, M02, M30, M97, M98, M99 must not be specified together with another M code.

Some M codes other than M00, M01, M02, M30, M97, M98 and M99 cannot be specified together with other M codes; each of those M codes must be specified in a single block.

4.1.1 Program Stop(M00)

Automatic operation is stopped after a block containing M00 is executed.

When the program is stopped, all existing modal information remains unchanged. The automatic operation can be restarted by actuating the cycle operation. This differs with the machine tool builder.

4.1.2 Optional Stop (M01)

Similarly to M00, automatic operation is stopped after a block containing M01 is executed. This code is only effective and program stop when input point M22(PIN5 of CN10 Plug) is valid

4.1.3 End of Program (M02,M30)

This indicates the end of the main program.Automatic operation is stopped and the CNC unit is reset.

4.1.4 Cycle of Program (M20)

Run program cycle , cycle time is set by P18 in User parameter.

4.1.5 Account of Workpiece(M87)

Number of workpieces will add one automatically as P10=0 in Other parameter.

4.1.6 Uncondtional Jump (M97)

M97 P_ , jump to specfied block number that specified by P.P4 said entrance line number with 4 field numbers specified program transfer main program.

Example: M97 P0120 , when excutive this code, CNC will jump to “N0120” block and run.

4.2 Subprogram Configuration

There are two program types, main program and subprogram. Normally, the CNC operates according to the main program. However, when a command calling a subprogram is encountered in the main program, control is passed to the subprogram. When a command specifying a return to the main program is encountered in a subprogram, control is returned to the main program.

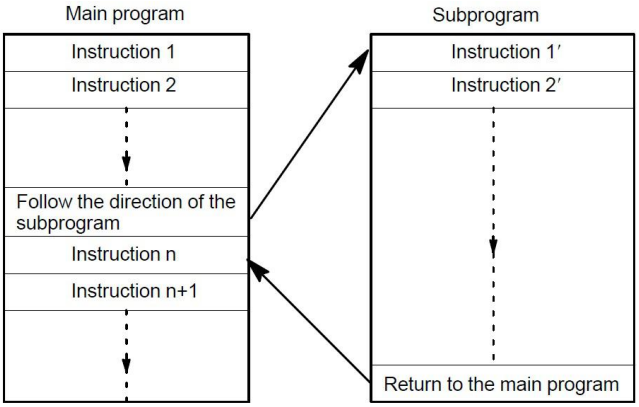

Fig4.2.1 Main program and subprogram

If a program contains a fixed sequence or frequently repeated pattern, such a sequence or pattern can be stored as a subprogram in memory to simplify the program.

A subprogram can be called from the main program.

A called subprogram can also call another subprogram.

4.2.1 Calling of Subprogram (M98)

This code is used to call a subprogram.The code and strobe signals are not sent.

M98 P_ L_ ;

P_: specify address & name of subprogram. Eg.: Psub/1390; sub is a folder.

Subprogram can be hidden files that don't display in program district,First character of these program must be a "HIDEFILE".

Example: "HIDEFILE01", the subprogram in the program area is not displayed, user can use these type commands to call subprogram.

M98 PHIDEFILE01

or **M98 P*01**

If user want to call subprogram in USB-disk, Format is " P[_" or " P]_".

Example: **M98 P[A1234** ; Call A1234 subprogram in USB-disk;

L_: number of times the subprogram is called repeatedly.When no repetition data is specified, the subprogram is called just once.

M98 instruction can be omitted. **Format: PP_** .

Example: **PP[FFDE ;** call "FFDE" subprogram in USB-disk;

Note: 1. There must has a blank before "L_" in this system;

2. Subprogram must be an independent program.

4.2.2 End of Subprogram (M99)

This code indicates the end of a subprogram.M99 execution returns control to the main program.No code or strobe signal is sent.

1) M99 in main program is same to M02;

2) M99 with P in main programis same to M97 ;

3) M99 in subprogram return to next block of M98;

4) M99 with P in the subroutine return to specified block in main program.

When the main program calls a subprogram, it is regarded as a one–level subprogram call. Thus, subprogram calls can be nested up to four levels as shown below.

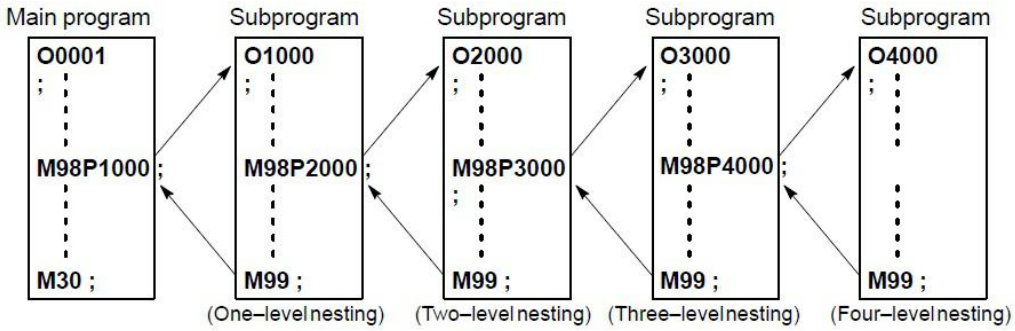

Eg.:Execution sequence of subprograms called from a main program.A subprogram can call another subprogram in the same way as a main program calls a subprogram.

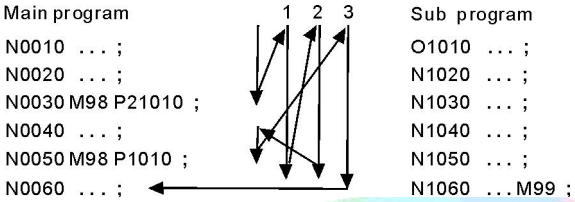

A single call command can repeatedly call a subprogram up to 9999 times.

4.3 Standard PLC M Command List

4.3.1 M Output Command List

Function	Code	Introduction	Statement
Spindle	M03	Spindle on CW	Functions interlocked and states reserved
	M04	Spindle on CCW	
	M05	Spindle Stop	
Coolant	M08	Coolant ON	Functions interlocked and states reserved
	M09	Coolnat OFF	
Chuck	M10	Chuck Clamping	Functions interlocked and states reserved
	M11	Chuck Unclamping	
Lubricate	M32	Lubrication ON	Functions interlocked and states reserved
	M33	Lubrication OFF	
Huff	M59	Huff ON	Functions interlocked and states reserved
	M58	Huff OFF	
Oriention	M61	Spindle Orientation	Functions interlocked and states reserved
	M60		
1	M79	User-define Output 1 ON	Functions interlocked and states reserved
	M78	User-define Output 1 Off	
2	M63	User-define Output 2 ON	Functions interlocked and states reserved
	M62	User-define Output 2 Off	
3	M65	User-define Output 3 ON	Functions interlocked and states reserved
	M64	User-define Output 3 Off	
4	M67	User-define Output 4 ON	Functions interlocked and states

	M66	User-define Output 4 Off	reserved
5	M69	User-define Output 5 ON	Functions interlocked and states
	M68	User-define Output 5 Off	reserved
6	M71	User-define Output 6 ON	Functions interlocked and states
	M70	User-define Output 6 Off	reserved
7	M73	User-define Output 7 ON	Functions interlocked and states
	M72	User-define Output 7 Off	reserved
8	M75	User-define Output 8 ON	Functions interlocked and states
	M74	User-define Output 8 Off	reserved

M75/M74: When CNC system is configurated with C axis , which is used for switch the control mode (Position control Mode & Analog Speed Mode) of servo spindle. When M75 is valid, which is set servo spindle to position control mode,when M03/M04 is valid, turn off M75.

M71/M70: When P20 in Other parameter set to 1, M11 output M71.

Note: All M output commands, output 0V effective level.

4.3.1.1 Spindle Control (M03/M04/M05)

M03 is for control CW of spindle , M04 is for control CCW of spindle , M05 is for stop spindle.

Input Point

M03	PIN19_CN3 Plug	CW of Spindle
M04	PIN7_CN3 Plug	CCW of Spindle
M05	PIN20_CN3 Plug	STOP of Spindle

Wiring Diagram

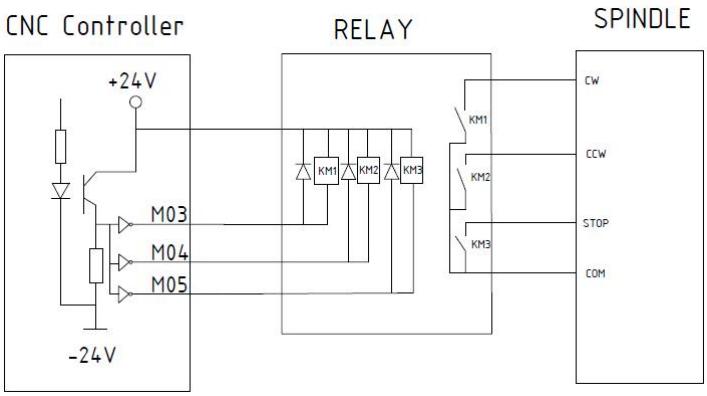

Fig4.3.1 Wiring Diagram for Spindle

According to this wiring diagram, it will consist a control circuit with +24V when system output M03/M04/M05 signal, coil of relay works and NO type switches will be ON , and control related function of spindle.

Note:1. Effective level of all output points is 0V.

2.When the relays and others inductance load, must connected with the reverse diode to absorb the reverse current so as not to damage the system, if use the electromagnetic contactor, then plus resistive and capacitive spark circuit.

Parameter Set

System output dual analog for spindle for control speed of two spindles,2nd analog output 1st analog,which set by D11_P9 in Other parameter.

In Axis parameter

P7 : Set the braking time of spindle, also the hold time of output M05, Unit:10ms. The time less , the braking faster.

P8 : Set the braking signal is long signal 1 or short signal 0.

P9: To set system whether checking spindle feedback signal of spindle position, also the feedback signal is spindle encoder signal. To set the parameter value 1 means check; 0 means not to check.

P10: To set feedback pulse numbers of spindle encoder turn a round, the value: Line number of encoder * 4.

P11: Whether turn on the spindle or not when shifting [1 means on, 0 means off]

P51: The speed of motor when spindle shifting (unit: 1/100rpm)

P52: The direction when spindle shifting (0 means positive, 1means negative)

P53: The stopping time when spindle shifting (unit: 10ms)

P54: Turning time of low speed when spindle shifting (unit:10ms)

P55: Stopping delay time of spindle (Unit:10ms)

In Speed parameter:

P8: To set the speed of spindle at manual condition. Unit: rpm.

P36: To set the max speed of spindle, also the speed of corresponding 10V.

Attention: when spindle system is with gears,this is the speed of first gear.

P37: To set the max speed of spindle(second gear), that's the turning speed of corresponding 10V instruction voltage.Unit: rpm.

P38: To set the max speed of spindle (Third gear), that's the turning speed of corresponding 10V instruction voltage. Unit: rpm.

P39: To set the max speed of spindle (Fourth gear), that's the turning speed of corresponding 10V instruction voltage. Unit: rpm.

P40: To set the highest speed of second spindle, also the speed of corresponding 10V. In Other parameter:

P13: To set whether spindle and chuck is interlocking or not: 0 means they are separately; 1 means the spindle only start turning when chuck on. The thumbstall can't be use when the spindle is turning.

Setting parameter is related with the configuration of lathe and user's service condition, but consider for safe, suggest setting 1,also interlocking.

4.3.1.2 Spindle Gear Shifting(M41/M42/M43/M44)

Remark	PIN	Function	Command
S01	PIN10_CN3 Plug	Output 1st gear of spindle	M41
S02	PIN23_CN3 Plug	Output 2nd gear of spindle	M42
S03	PIN11_CN3 Plug	Output 3rd gear of spindle	M43
S04	PIN24_CN3 Plug	Output 4th gear of spindle	M44

M41/M42/M43/M44 output S01/S02/S03/S04 for shifting gear of spindle , and adjust analog voltage to adjust speed of spindle.

P36 in Speed parameter is set for max speed of 1st class spindle;

P37 in Speed parameter is set for max speed of 2nd class spindle;

P38 in Speed parameter is set for max speed of 3rd class spindle;

P39 in Speed parameter is set for max speed of 4th class spindle;

Note:Functions interlocked and states reserved

4.3.1.3 Coolant(M08/M09)

M08:Turn on coolant

M09: Turn off coolant

Remark	PIN	Function
M08	PIN8_CN3 Plug	Turn On/Off coolant

4.3.1.4 Lubricate(M32/M33)

M32: Turn on lubrication

M33: Turn off lubrication

Remark	PIN	Function
M32	PIN9_CN3 Plug	Turn On/Off Lubrication

In Other parameter,

P4 controls the function of lubricate automatically.

P6 is set the interval time of lubrication (Unit: s);

P5 set the time of lubrication ,also holding time of output M32(Unit: 10ms).

4.3.1.5 Chuck(M10/M11)

M10/M11 are for control clamping/unclamping of chuck.

Remark	PIN	Function
M10	PIN21_CN3 Plug	Control Chuck clamping
M71	PIN9_CN10 Plug	Control chuck unclamping(Spare)
M12	PIN11_CN10 Plug	Detect position of clamping_chuck(spare)
M14	PIN24_CN10 Plug	Detect position of unclamping_chuck(Loose)(spare)
M16	PIN12_CN10 Plug	Input point for switch to control chuck(spare)

Chuck of this system control is related with parameter as follows:

In Other parameter:

P2: Type of chuck, (Inner: Chuck to center when M10; Outer: Chuck opening outward when M10). 1 means outer, 0 means inner.

P13: Interlock between Chuck & Rotation_Spindle.0: No interlock, 1: yes.

M12: input point for detecting position of clamping of chuck;

M14: input point for detecting position of unclamping of chuck.

P20: Type of controlling singal for chuck,0: one output controlling signal for chuck; 1: two output controlling signals for chuck.

M10:output point for controlling clamping of chuck , controlling code is M10;

M71:output point for controlling unclamping of chuck,controlling code is M11.

P22: External Switch(Foot switch) for chuck, reciprocating mode, price one time clamping chuck; press twice time, unclamping chuck. 0: without switch ; 1: with external switch for control chuck; input signal is M16.

P24: Holding time of output M10/M71 of chuck, unit: s. 0: mode type*.

In Axis parameter:

P40_D1: Detect position of clamping/unclamping of chuck,0:No detect, 1: yes.

Note: 1. When user-defined signals M71/M70 , M73/M72 are used for output signal of spindle chuck and Tailstock, it can't be used for other functions.

2. M12,M14,M1,M18,M28 are multi-function codes, only one function when using.

3. *mode type means that once valid,always valid until cancelling/resetting code.

4.3.1.6 Huff(M59/M58)

M59: Turn on huff M58: Turn off huff

Remark	PIN	Function
M59	PIN6_CN10 Plug	Turn on/off huff, also blower

4.3.1.7 Condition Output of Machine Tool(M65/M67/M69)

M65/M67/M69 be used for output condition of machine tool, set by parameters

Remark	PIN	Function
M65	PIN20_CN3 Plug	Output Alarm condition of machine tool
M67	PIN8_CN3 Plug	Output Running condition of machine tool
M69	PIN21_CN3 Plug	Output Pausing condition of machine tool

Parameter sets for condition output ofmachine tool. In Other parameter:

P28: M65/M69 are as outputs for run/halt condition of machine tool,0:no,1:yes.

P29: M67 is as output for alarm condition of machine tool, 0: no, 1:yes.

Note:1.When M65,M67,M69 are used for output condition of machine tool, and then they can't be used for other functions.

2.Valid level of all output points is 0V. When fixed with inductance load, must connected with the reverse diode to protect inner circuit of cnc system.

4.3.2 M Input Command List

No.	Code	Function Introduction	Statement
1	M12	Check M12 is valid	These codes can be used for conditional wait or conditional jump.
	M13	Check M12 is invalid	
2	M14	Check M14 is valid	
	M15	Check M14 is invalid	
3	M16	Check M16 is valid	
	M17	Check M16 is invalid	
4	M18	Check M18 is valid	
	M19	Check M18 is invalid	
5	M28	Check M28 is valid	
	M29	Check M28 is invalid	
6	M22	Check M22 is valid	
	M23	Check M22 is invalid	
7	M24	Check M24 is valid	
	M25	Check M24 is invalid	

Note: All M input commands, input effective level is 0V.

There are two kinds of special application about M input commands,as following,

a) Conditional Wait

Example: M12

When Input point M12 is valid, program goes on run following blocks, if M12 is invalid, system will wait if M12 is valid.

b) Conditional Jump

Example: M14 P0120

When the program running to this block and the system detecting if M14 input signal is valid. When M14 is valid, program will jump to 120th line of program (also N0120 block), otherwise , system will execute the next block.

4.4 Analog Speed of Spindle(S , SS)

SZGH CNC system support dual analog outputs for SP_speed.

Speed of 1st spindle is set by “S**”; Speed of 2nd spindle is set by “SS**”.

P36 in Speed parameter is set for max speed of 1st spindle; P40 in Speed parameter is set for max speed of 2nd spindle.

Note: D11_P9=1 in Other parameter is set for output 1st analog voltage to dual analog output(+10V of CN3&CN10) at same time, without function of “SS**”.

There are two gears control ways for 1st spindle as following,

(1) Four gears spindle speed electrical control, output four bits code of step speed change, M41-M44 control instructions correspondly output S01-S04 code, with fixed speed. P50/P51/P52/P53/P54 in Axis parameter are set for mode of shifting.

(2) Four gears+Variable speed, M41-M44 instruction control, correspond the output S01-S04 code. P42/P43/P44/P45 in Speed parameter are set for maximum speed of corresponding gear, P50/P51/P52/P53/P54 in Axis parameter are set for mode of shifting.

Variable speed,range is 0-99999, output 0-10V variable-frequency voltage.

Note: Output 10V is corresponding to max speed of spindle.

4.5 Comprehensive examples for programming

In the actual programming, must according to the drawings and processing requirements to select the install method and suitable tool correctly, combined with the actual working performance of milling to select the correct cutting allowance, for example:

Example 1: Cut square and cut circle

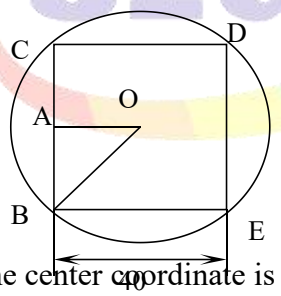

From the center to begin, the center coordinate is G54 X0 Y0 Z50

The tool radius in the D01 of the T01 parameter

N0 G54 G00 X0 Y0 Z50	Starting point for processing
N1 M03 S1000	Turn on spindle
N2 G00 Y-40 X－40 G90	Move outside of square
N3 Z10	
N4 G01 Z－10 F200	Start cutting from Z axis
N5 G01 G41 T01 D01 X-20 Y-20 F400	Move to B point
N6 Y20	Tool cuts BC line at the left of the workpiece
N7 X20	Closed angle transition in C point, cut CD line
N8 Y－20	Closed angle transition in D point, cut DE line
N9 X-25	Closed angle transition in E point,cut CB line is for smooth，move 5mm more

N10 G00 X-40 Y-40 G40	Move outside of circle
N11 G01 G41 X－20 Y－20 F500	Lengthen T01 value along A-B
N12 Z－20 F100	Start cutting from Z axis
N13 G91 G02 I20 J20 Y0 X0	Circle of contact
N14 G00 Z50	End cutting
N15 G40 G00 X0 Y0	Cancel tool compensation
N16 M05	Turn off spindle
N17 M02	Program is over

4.6 Usage for automatic tool setting gauge

1. Note for parameter:

Define macro variables of the automatical tool setting gauge function are as follows (corresponding to the other parameters P380 - P389):

#380: The X axis milling coordinate of initial position with automatical tool setting;(Unit:mm)

#381: The Y axis milling coordinate of initial position with automatical tool setting;(mm)

#382: The Z axis milling coordinate of initial position and returning point with automatical tool setting;(mm)

#383: The negative speed of automatical tool setting;(mm/min)

#384: The positive speed of automatical tool setting;(mm/min)

#385: The Z axis coordinate of workpiece surface in current workpice coordinate system after automatical tool setting;(mm)

#386: The speed which is rapid move to locating position with automatical tool setting;(mm/min)

#387: Automatic tool setting mode (1 means fixed point, 0 means floating point).

#388: The minimal milling coordinate value of Z axis (mm);

#389: The gap value of Z axis [The height which is the gauge surface relative to the workpiece surface(mm)];

Fixed point gauge means putting the gauge in a fixed position, everytime the X Y Z axis are automatical running to the fixed point first in tool setting; But the floating point gauge search the tool setting gauge signal along negative of the Z axis.

The input point X25 is default to be the checking point of automatical tool setting gauge to input.

2.The instruction: M880 (corresponding to ProgramUser0) automatic tool setting instruction; M882 (corresponding to ProgramUser2), M883 (corresponding to ProgramUser3) set the gap of Z axis.

3. Automatic tool setting steps:

a)Set the No.380--No.388 parameter in other parameter;

b)Set the No.389 parameter in other parameter to set the gap of Z axis: this operation needs to be set only once.

A.Run M882 instruction in MDI to set the gap of Z axis;

B.Manual run Z axis to move the tool nose to the workpiece surface;

C.Run M883 instruction in MDI to automatical set the gap of Z axis No.389 parameter in other parameter;

c) MDI choose the workpiece coordinate system G54/G59;

d) Automatic tool setting: MDI running the M880 instruction, automatical set the Z axis offset of the current workpiece coordinate system.

4.7 Usage for automatical dividing center

1. The X axis is divided center: M884(Corresponding to ProgramUser4)

1) Choose the current coordinate system such as G54;

2) Manually moving the X to the negative terminal of workpiece; MDI running the M884 instruction;

3) Manually moving the Y to the positive terminal of workpiece; MDI running the M885 instruction, automatically divide the center of Y axis and set the middle point of workpiece as current coordinate system of Y axis origin, that's automatically setting the current coordinate system, such as the coordinate offset value of Y axis in G54.

2. The Y axis is divided center (Corresponding to ProgramUser5): M885

1) Choose the coordinate system such as G54;

2) Manually moving the Y to the negative terminal of workpiece; MDI running the M885 instruction;

3) Manually moving the Y to the positive terminal of workpiece; MDI running the M885 instruction, automatically divide the center of Y axis and set the center point of workpiece as the current coordinate system of Y axis origin,that's automatically setting the current coordinate system, such as the offset value of Y axis in G54.